FINAL REPORT

National Science Foundation Grants
17502, GB-2672, and GB-6089

STUDY OF GRIZZLY BEARS AND OTHER BIG GAME SPECIES BY RADIOTELEMETRY

Principal Investigators: Frank C. Craighead, Jr.
State University of New York at Albany,
Atmospheric Sciences Research Center
Environmental Research Institute

J. J. Craighead
Montana Cooperative Wildlife Research Unit
University of Montana

Contracting Institution: University of Montana
Missoula, Montana 59801

July 31, 1971

CONTENTS

Summary

Radiolocation and Telemetry Equipment Design

Grizzly Bear Prehibernation and Denning Activities as Determined by Radiotracking

Home Ranges and Activity Patterns of Migratory Elk of the Madison Drainage Herd as Determined by Biotelemetry

Satellite Tracking of Elk

Satellite Monitoring of Black Bear

SUMMARY

Objectives

There were two objectives to the research conducted under National Science Foundation grants 17502, GB-2672, and GB-6089. One was to develop a radiolocation system and various types of physiological telemetering equipment for use on grizzly bears and other large mammals. The other objective was to use this equipment in a study of the grizzly bear, black bear, and elk populations of Yellowstone National Park to gather detailed behavioral and ecological data.

Results and Accomplishments

The proposed development and research objectives were met and a great deal of valuable ecological data has been accumulated during the grizzly bear study.

A dependable and accurate radiolocation system was developed, and used and improved during nine seasons of field observations on both grizzly bear and elk. In its present state of development, the radiolocation system permits individual instrumented animals to be located at will from a considerable distance. This ability to determine the movements and home ranges of animals has provided a wealth of information that was not possible to obtain using more conventional study methods. The ability to locate and closely approach selected animals whenever desired to make detailed observation of their behavior and habitat has proven to be particularly valuable. The extensive use and refinement that the equipment has received enables it to be considered an operational rather than an experimental system, and as such should

be of considerable potential value to other researchers.

Telemetry equipment suitable for transmitting environmental and physiological data from widely-ranging unrestrained animals was developed and applied. Transmitters were designed and tested which telemetered environmental temperature, skin temperature, deep body temperature, heart rate, vocalizations, and activity data over distances ranging up to several miles. Body temperature and activity data were transmitted from several free-roaming elk, and body temperature data was telemetered from the dens of three hibernating black bears.

Behavioral and ecological data on grizzly bears obtained with the help of the radiolocation and telemetry equipment includes information on home ranges, social interaction, centers of activity, reproductive biology, foraging habits, prehibernation movements, denning behavior, and many other aspects of the animal's behavior and interaction with his environment. Data obtained with these techniques in a concurrent study of elk in Yellowstone National Park provided information on home and seasonal ranges, centers of activity, daily movements, 24-hour activity patterns, habitat preference, social structure, and association and exchange among bands.

In addition to the continuing grizzly bear and elk studies in Yellowstone National Park, the radiolocation system was also used in a recent feasibility experiment conducted in cooperation with NASA in which a migrating elk was tracked by the Nimbus 3 satellite. It provided location information by ground tracking for comparison with the satellite-acquired data.

In a second satellite data collection experiment, the body

temperature telemetry and recording equipment was used to monitor the deep body temperature of a hibernating black bear and the air temperature in his winter den.

More detailed descriptions of the various aspects of the work accomplished during the contract period are given in the separate reports that follow. The design and performance of the equipment are discussed in Radiolocation and Telemetry Equipment Design. Portions of the behavioral and ecological data gathered during this time are summarized in Grizzly Bear Prehibernation and Denning Activities as Determined by Radiotracking, and Home Ranges and Activity Patterns of Nonmigratory Elk of the Madison Drainage Herd as Determined by Biotelemetry. Other biological findings are discussed in papers and articles which are not included in this final report but are listed in the References section following. Several other papers are in preparation. The use of the equipment in the satellite experiments is discussed in Satellite Monitoring of Black Bear and Satellite Tracking of Elk.

References

In addition to the material included in this final report, the articles, reports, and publications listed below describe various aspects of the research conducted during the grant period.

PROGRESS REPORTS PREVIOUSLY SUBMITTED TO NSF:

Craighead, F.C. Jr., and J.J. Craighead. 1963.
Radiotracking of Grizzly Bears, 1963 Report: Ecological Findings Obtained by Bio-Telemetry. 32 pp. mimeo.

Craighead, F. C. Jr., and J.J. Craighead. 1964
Radiotracking of Grizzly Bears, 1964 Report: Biotelemetry Results, Ecological, Physiological. 41 pp. mimeo.

Craighead, F.C. Jr., and J.J. Craighead. 1965.
Biotelemetry Research, 1965. 51 pp. mimeo.

Craighead, F.C. Jr., and J.J. Craighead. 1966.
Radiotelemetry of Large Western Mammals: Progress Report, 1965-66. 67 pp. mimeo.

RELATED PUBLICATIONS

Montana Cooperative Wildlife Research Unit Quarterly Reports and Yearly Highlights Reports, 1965-1970. Mimeo.

Craighead, F.C. Jr., and J.J. Craighead. 1963.
Tracking Grizzly Bears. BioScience 15(2):88-92.

_____ and _____. 1963. Progress in biotelemetry studies of grizzly bears. Proc. 18th Ann. Instr. Soc. Amer. Conf., Biotelemetry Session, Sept. 9, 1963, Chicago.

Craighead, F. C., Jr., J. J. Craighead, R. S. Davies. 1963. Radiotracking of grizzly bears. In L. Slater (Ed), Bio-Telemetry. Pergamon Press, New York. p. 133-148.

Craighead, F. C., Jr. 1964. Yellowstone Field Research Expedition IV: Telemetering ambient temperature of brine fly habitat. In Atmospheric Sciences Research Center Pub. No. 22, State University of New York at Albany. pp. 37-41.

_____ and J. J. Craighead. 1965. Yellowstone Field Research Expedition V: Temperature sensitive transmitter on elk. In Atmospheric Sciences Research Center Pub. No. 31, State University of New York at Albany. pp. 39-46.

_____ and _____. 1966. Trailing Yellowstone grizzlies by radio. National Geographic 130(2):252-267.

_____, _____, and J. Varney. 1966. Yellowstone Field Research Expedition VI: Monitoring body temperature from free-roaming elk. In Atmospheric Sciences Research Center Pub. No. 37, State University of New York at Albany. pp. 50-53.

Craighead, F. C., Jr., and J. J. Craighead. 1967. Yellowstone Field Research Expedition VII: Instrumenting a hibernating black bear for body temperature readings. In Atmospheric Sciences Research Center Pub. No. 45, State University of New York at Albany. Pp. 61-71.

_____ and _____. 1967. Radio-beobachtungen an Grizlybaren sind nicht frei von Risiko. Das Tier, December. pp. 29-35.

Craighead, J. J. and F. C. Craighead, Jr. 1967. Management of bears in Yellowstone National Park. Mimeo, 113 pp.

Craighead, F. C., Jr. 1968. Radiotracking of grizzly bears in Yellowstone National Park, Wyoming. In National Geographic Society Research Reports, 1963 Projects. pp. 59-67.

Craighead, F. C., Jr., J. J. Craighead, and J. Varney. 1968. Yellowstone Field Research Expedition VIII: Field testing automatic telemetry recording equipment. In Atmospheric Sciences Research Center Pub. No. 68, State University of New York at Albany. pp. 57-63.

Craighead, F. C., Jr., and J. J. Craighead. 1969. Radiotracking of grizzly bears in Yellowstone National Park, Wyoming, 1964. In National Geographic Society Research Reports, 1964 projects. pp. 35-44.

Craighead, J. J., M. G. Hornocker, F. C. Craighead, Jr. 1969. Reproductive biology of young female grizzly bears. J. Reprod. Fert., Suppl. 6(1969):447-475.

Craighead, F. C., Jr., and J. J. Craighead. 1970. Radiotracking of grizzly bears in Yellowstone National Park, Wyoming, 1962. In National Geographic Society Research Reports, 1961-1962 projects. pp. 63-71.

Craighead, J. J. 1970. Is the grizzly worth saving? Wisconsin Insight (Milwaukee Journal). July 12:p. 16-21.

Craighead, J. J., and F. C. Craighead, Jr., and H. E. McCutchen. 1970. Age determination of grizzly bears from fourth premolar tooth sections. J. Wildl. Mgmt., 34(2):353-363.

Craighead, F. C., Jr. and J. J. Craighead. 1971. Radiotracking of grizzly bears in Yellowstone National Park, Wyoming, 1965. In National Geographic Society Research Reports, 1965 projects. pp. 49-62.

Craighead, J. J., G. Atwell, and B. W. O'Gara. 1971. Elk migrations in and near Yellowstone National Park. Wildlife Monographs (in press).

Craighead, J. J. and F. C. Craighead, Jr. 1971. Grizzly bear - man relationships in Yellowstone National Park. BioScience (accepted for publication in August 15, 1971 issue).

Varney, J. R. 1971. A tracking and telemetry system for wildlife research. 1971 National Telemetering Conference Record IEEE Pub. No. 71 C 10=NTC. pp. 247-252.

RADIOTRACKING AND TELEMETERING EQUIPMENT DESIGN

Joel R. Varney

Research Associate
Montana Cooperative Wildlife
Research Unit
University of Montana
Missoula, Montana

June 30, 1971

CONTENTS

INTRODUCTION Page 1

1. LOCATION SYSTEM

Selection of system parameters 4

Transmitters 10

Standard model 12

Circuit design 13

Transmitter construction 15

Extended life transmitters 21

Accutron timer 21

Transistor timer 22

Receivers 24

Communication receivers 25

Modulated input receiver 26

BFO receiver 26

Receiver/transmitter for voice communication 32

Antennas 33

Loop antenna 33

Yagi antennas 34

Quad antenna 37

Polarization considerations 39

Antenna performance comparisons 40

2. TELEMETERING EQUIPMENT

Selection of modulation methods 41

Ambient temperature 43

Collar transmitter 43

Environmental monitoring transmitter 45
Pulse counting circuit 48
Temperature converter for chart recording 48
Body temperature 50
Single channel system 52
Two channel system 54
Activity 59
Heart Rate (EKG) 63
System operation 63
Transmitter circuit 65
Discriminator circuit 67
System performance 68
3. MISCELLANEOUS EQUIPMENT
Antenna lobe switching system 70
Circuit description 71
Antenna mounting 72
Performance 75
Repeater 75
System operation 76
Circuit description 77
Performance 79
Recorder multiplexer 80
Circuit description 80
Performance 82
Receiver frequency and power switching 82
Rescue beacon transmitters 84

INTRODUCTION

This report describes radio equipment developed for and used in ecological studies of elk, black bear, and grizzly bear during the period from 1961 to the present. The use of radio for location and telemetry of physiological data from free-roaming animals has been extremely useful and has enabled information to be accumulated that would be difficult or impossible to obtain by other methods.

The report is divided into three parts. The first describes the basic location system and the evolution of the equipment to its present form. The second part describes equipment that was used for telemetering various environmental and physiological parameters. The third section covers miscellaneous related equipment that was developed as part of the overall tracking system.

1. LOCATION SYSTEM

The basic radio location system consists of a small beacon transmitter which is attached to the animal by a neck collar and a number of directional receiving stations. Directional bearings are taken on the signal from the transmitter, permitting the location of the animal to be established.

A block diagram of the location system is shown in figure 1. The transmitter collar radiates a pulsed signal which can be received by a

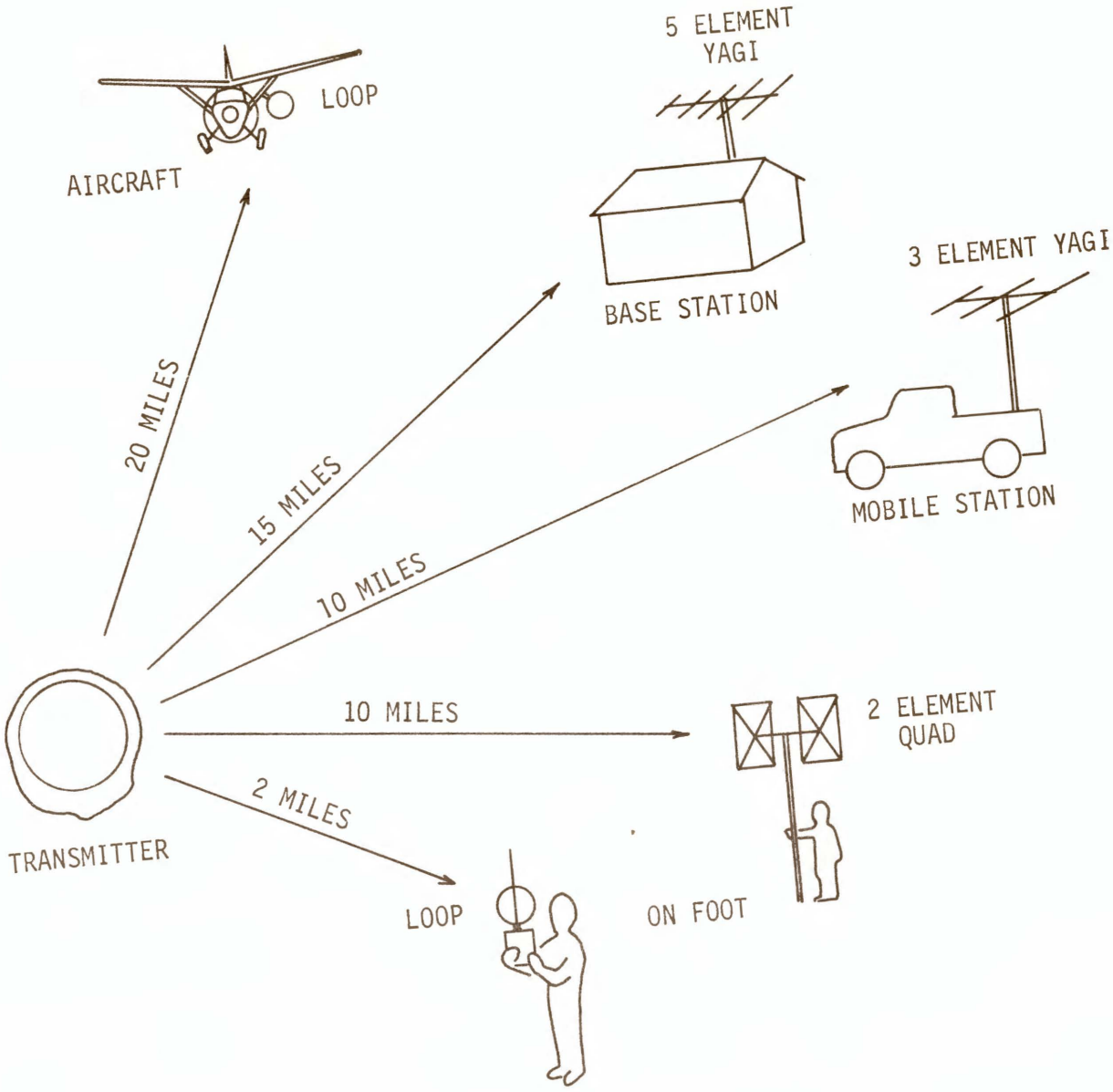

Figure 1: Radio Location System

variety of stations, depending on the desired range and degree of portability necessary. A small battery-operated receiver with a directional loop antenna is used for tracking on foot at ranges of a few miles or less from the animal. The range is limited by the small size of the antenna. For longer range, a larger antenna is used with the same receiver. When the animal is in a location where tracking from a nearby road is possible, a 3-element yagi antenna mounted on a vehicle provides up to 10 mile range. A more sensitive 5-element yagi antenna located at a base station gives up to 15 miles range. Fixed-wing aircraft or helicopters with the directional loop antenna mounted on the fuselage can be used for more remote locations with up to 20 mile range.

Simultaneous bearings from two stations allow determination of the animal's location by triangulation. The bearings and their intersections were plotted on a map of the area. This technique was used to follow movement over periods of several days. More often a series of bearings would be taken from different locations within a short period of time using a single portable receiver or mobile station to determine the approximate location of an animal. Considerable use was also made of the portable receivers without map plotting to determine the direction of the animal from the observer when moving in on foot for visual observations.

Field experience showed that very precise bearing information and extensive map plotting were generally not necessary. The topography of the area where most of the work was conducted (a combination of forested areas and open meadows) and a knowledge of the animal's habits permitted

satisfactory determination of the location of the animal with one or two bearings from different locations.

The design, construction, and performance details of the transmitters and receivers that were developed for the system are discussed in the following sections.

SELECTION OF SYSTEM PARAMETERS

The selection of the various tracking system parameters such as frequency, transmitter power, signal modulation, antenna types, and transmitter lifetime was a tradeoff process involving many factors.

The initial requirements that were established for the tracking system were as follows:

Collar weight:	under 5 lbs
Transmitter life:	several months to 1 year
Range:	2 miles minimum

A pulsed signal was selected to minimize the transmitter power requirements and allow maximum battery life to be obtained. The pulsed signal is not as convenient as a continuous signal for taking directional bearings, but the use of a very short duty cycle pulse reduces the battery drain to 5% of that of a continuous signal and extends battery life by a factor of nearly 20.

The operating frequency of the system was selected on the basis of available frequency allocations, ground propagation characteristics,

equipment availability, and antenna size. Low frequencies are desirable to reduce shielding effects in mountainous terrain, while the use of high frequencies results in smaller transmitter component size and smaller, more manageable antennas. The 20 to 50 MHz region was chosen as a good compromise between these characteristics. Permission was obtained from the Department of the Interior to use 32 MHz. This is close enough to the 27 MHz Citizen's Band to allow use of commercially available receivers and antennas with minor modifications and considerably reduced the amount of new equipment design necessary.

Theoretical range calculations were of very little use because of the extreme variations in path loss between transmitter and receiver due to shielding and terrain effects in mountainous country, and because of the difficulty of determining the transmitter antenna gain after it had been placed on an animal. Consequently, the transmitter output power selected was the maximum that would give 3 months life with a 1 lb battery pack. The resulting output power was approximately 100 mW. Field tests showed that this level was sufficient to give the desired range under most conditions.

The sensitivity of the directional receivers is determined primarily by their bandwidth, which is in turn determined by transmitter and receiver frequency stability. The 3 KHz bandwidth of standard Citizen's Band receivers was judged to be satisfactory for the transmitter design used and the temperature extremes which would be encountered in field use. A narrower bandwidth would give better sensitivity under optimum conditions,

but sensitivity would be degraded by frequency shifts in the transmitters and receivers with widely varying temperatures.

An investigation was made to determine the optimum transmitter pulse width, repetition rate, and duty cycle. The goal, of course, was to obtain the maximum range with the least possible power consumption. Since the transmitter uses power only when on and drain is negligible between pulses, the pulse width and repetition frequency determine battery life. Measurements were made with various combinations of pulse repetition frequency and duty cycle with the test setup shown in figure 2.

The basis of comparison of the various pulse widths and rates is the minimum detectable signal level, which is the signal power into the receiver which is just audible above the background noise. This is a rather subjective measurement, but simulates actual operating conditions closely.

The measurements indicate that signals with long pulse widths can be heard at lower levels than short pulses. This is probably due to an integration effect by the ear that tends to cancel the background noise over longer periods. Figure 3 shows the variation of minimum detectable signal level with pulse width for three different pulse repetition frequencies. The curves show that detectability depends mainly on pulse width, not repetition frequency, since the level is nearly the same for all three repetition rates. Since the duty cycle of the transmitter is equal to the ratio of the pulse width to pulse period, it is evident that a low pulse repetition frequency is desirable for low duty cycle and long

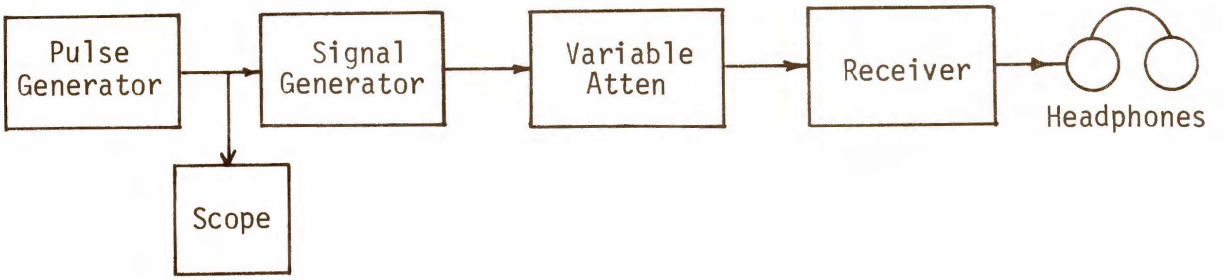

Figure 2: Test setup for pulse measurements

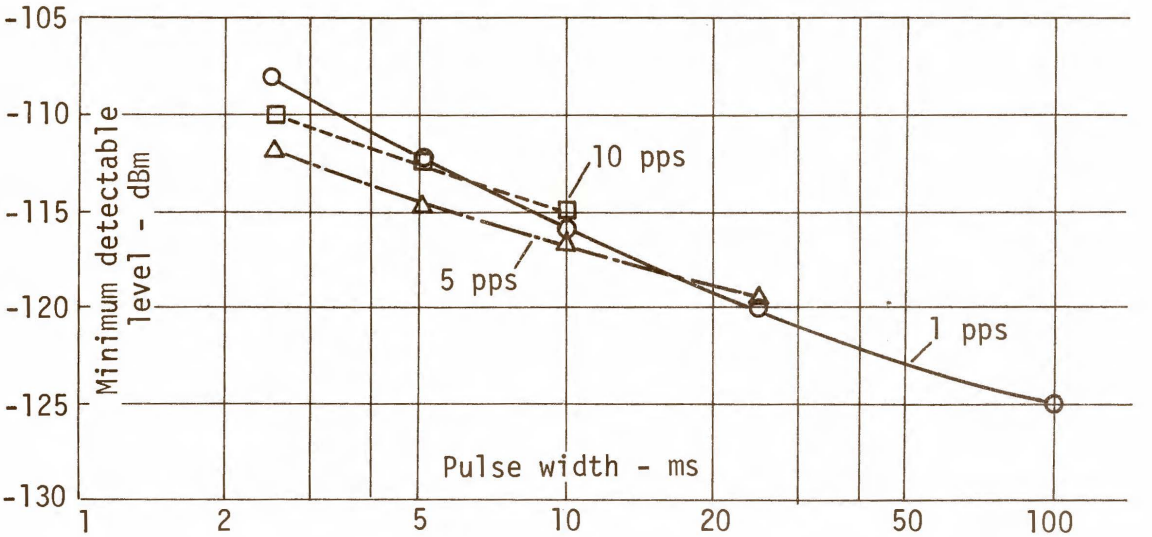

Figure 3: Variation of minimum detectable signal level with pulse width and pulse repetition frequency for low PRF

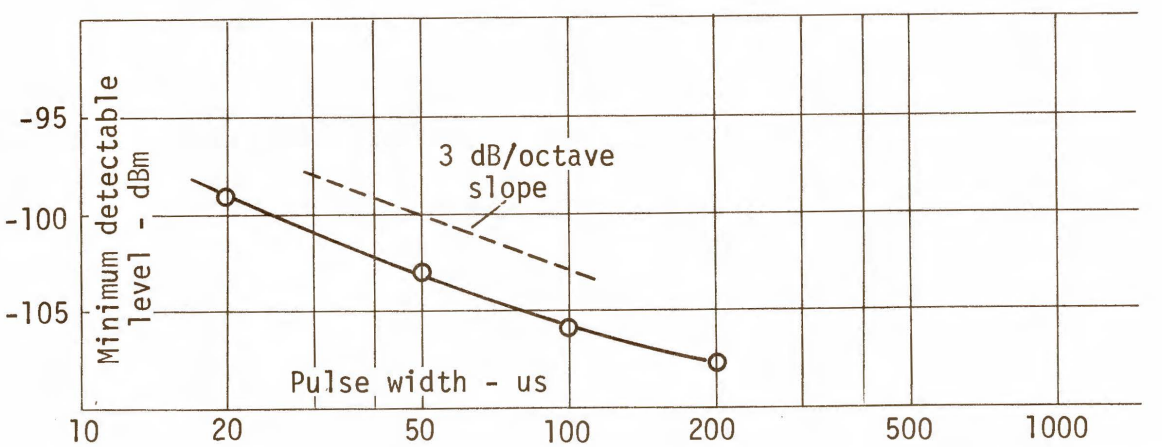

Figure 4: Variation of minimum detectable signal level with pulse width for a constant 1 kHz pulse repetition frequency

battery life.

The limiting factor on the amount by which the pulse repetition frequency can be reduced is the ease with which bearings can be taken on the signals by the directional receiving stations. Field tests showed that pulse rates lower than 1 pulse per second become difficult to work with. If it is assumed that the duty cycle can be a maximum of 5% (determined by battery life requirements), this means that the longest allowable pulse width is 60 ms. Longer pulses would be audible at lower signal levels and thus give longer range, but would reduce the transmitter battery life below the desired minimum. A nominal pulse width of 50 ms was chosen for the system.

An experiment was also made with a very fast pulse rate (1000 pulses per second) and the results shown in figure 4. The signal from a transmitter with this pulse rate would be received as a constant tone and would permit receiver simplification since a BFO would not be necessary. As might be expected, however, the minimum detectable signal level is much higher because of the reduced pulse width and system range would be reduced. Fast-pulse systems are thus not as good as the 50 ms pulse width system selected.

Specifications of the final versions of the transmitters and receivers used in the location system are summarized in tables 1 and 2. A summary of typical ranges that were obtained with the system is given in table 3.

Table 1: Transmitter characteristics

Frequency	32 MHz
Output power	100 mW pulse
Pulse width	50 ms
Pulse repetition rate	1 per second (nominal)
Antenna type	resonant loop, 11 inch diameter
Antenna impedance	50 ohms
DC input power	280 mW peak, 18 mW average
Battery type	mercury, low temperature 9.3 volts, 4.5 Ah
Weight	
electronics	0.1 lb
battery	0.9 lb
complete collar	2.0 lbs
Operating lifetime	3 months standard, 9 months with additional timer

Table 2: Receiver characteristics

Frequency	32 MHz
Type	dual conversion, crystal controlled
Bandwidth (3 dB)	3 kHz
Sensitivity	-123 dBm nominal for 10 dB S/N
Battery type	Nickle-cadmium, 225 mAh
Size	3 x 7 x 8 inches
Weight	2 lbs
Battery life	10 hours between charges

Table 3: System range with various receiving antennas

Antenna type	Antenna gain	Use	System range*
Loop (11" dia.)	-10 dB (est.)	on foot	2 miles
		from aircraft	20
Dipole (reference)	0	-	
Quad	5	field station	10
3 element yagi	7	field station	10
5 element yagi	9	base station	15

*Typical value - varies widely with terrain

TRANSMITTERS

The transmitter which is placed on the animal to be tracked consists of the transmitter unit and a battery pack attached to a circular metal strap which acts both as a loop antenna and a collar. The assembly is covered with fiberglass-reinforced acrylic resin to protect the electronics and batteries, and to prevent flexing and bending which would otherwise cause antenna detuning or eventual breakage. The inside of the collar is padded with rubber hosing or foam rubber to make it fit the animal snugly and comfortably.

A drawing of the transmitter assembly is shown in figure 5. The electronics are enclosed in a hermetically sealed metal can which is filled with polyurethane foam encapsulant to protect the unit from shock and moisture. The transmitter is attached to the loop antenna with screws and the output connection from transmitter to antenna is made through a 6 inch length of RG-58U coaxial cable. A tuning capacitor assembly located diametrically opposite the transmitter resonates the inductance of the loop at the 32 MHz operating frequency.

Power for the transmitter is provided by a 7 cell pack of Mallory type RM-1450 low-temperature mercury cells. The battery pack is waterproofed by a combination of electrical tape, wax, and silicone rubber. It is attached to the collar next to the transmitter housing.

The length of the collar strap can be adjusted from a minimum of 27 inches to a maximum of 33 inches with the standard antenna tuning capacitor assembly. Smaller neck sizes can be accommodated by adding

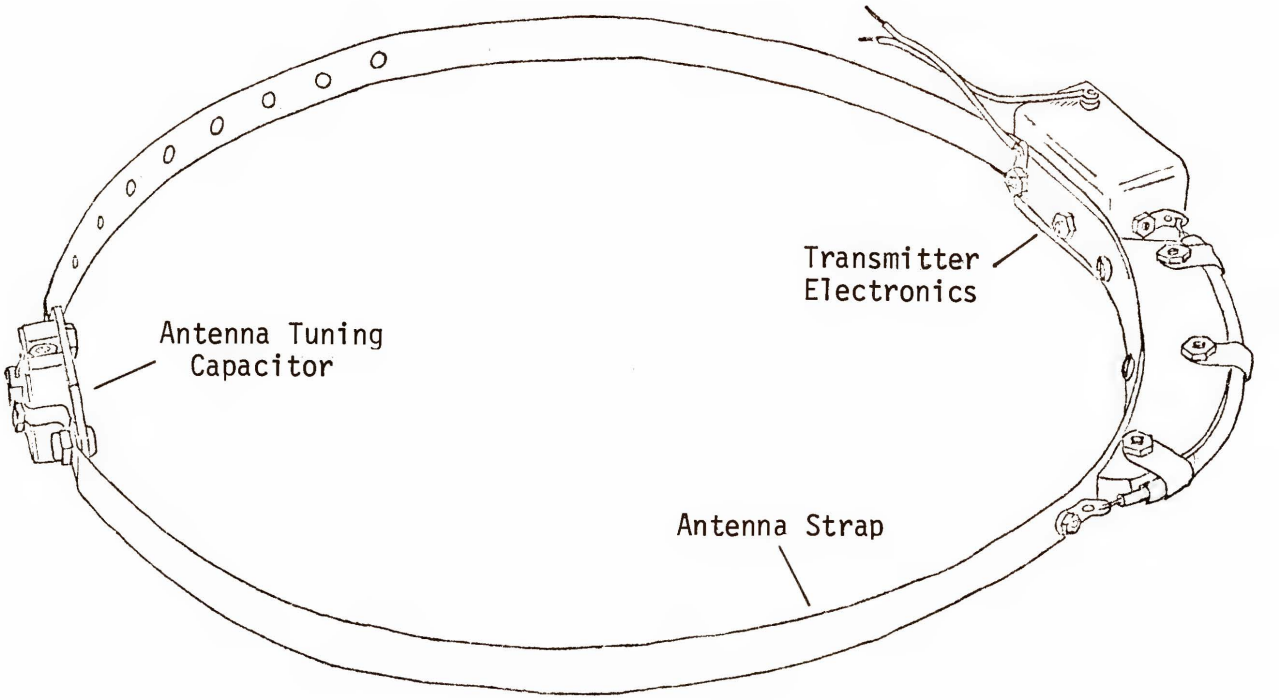

Figure 5: Transmitter and antenna assembly



Figure 6: Immobilized grizzly with transmitter collar in place. The field strength meter used to tune the antenna is beside the collar.

padding material to the inside of the collar or by shortening the strap and substituting a higher capacity tuning assembly.

The collar was designed so that the strap can be adjusted to the desired neck diameter at the time it is placed on the animal by inserting two screws in a series of holes in the overlapping ends of the strap. After the screws are placed and tightened, the collar tuning is adjusted for resonance with the aid of a field strength meter. Field measurements showed, however, that the shift in antenna tuning was negligible when the collar was placed on the animal's neck if the strap length was not changed. Since it was generally possible to estimate the size of the animal's neck while the collar was being prepared before instrumenting, it was possible to tune the antenna in the laboratory and eliminate field tuning by adding or removing a small amount of padding when placing the transmitter on the animal.

Figure 6 shows a completed collar in place on an immobilized bear.

Standard Model Transmitter

Two types of transmitters were used in tracking operations. For most situations the transmitter was designed to operate continuously, emitting a 50 ms pulse at approximately 1 second intervals. The battery life with this type of transmitter (called the standard model) is 3 months. In some cases a longer lifetime was desirable, so an additional timer circuit was used to turn the transmitter on and off at 30 second intervals. This type of transmitter was called the extended life model and is discussed in

in a following section.

Circuit Design

The circuitry of the transmitter was revised several times as improved components became available and as field experience showed performance shortcomings or areas in which improvements could be made.

Squegging oscillator circuits were initially considered for the transmitter because of the desire to minimize the number of components in the circuit. A squegging oscillator is a single transistor circuit which switches in and out of oscillation, giving a pulsed output signal. This approach was abandoned after building two prototype models because of large variations in pulse rate with transistor parameters, temperature, and antenna loading.

A more satisfactory approach, consisting of an oscillator switched by a timing circuit and followed by a power amplifier, is shown in figure 7. This circuit was used in the first transmitters placed on animals.

Transistors Q1 and Q2 form the timing circuit, which is an astable multivibrator which switches the oscillator stage Q3 on and off. The multivibrator gives good pulse rate stability, is relatively insensitive to transistor parameter variations, and allows changes in pulse rate or duty cycle by changing R1 and R2. The pulse rate of each transmitter is made slightly different for identification purposes.

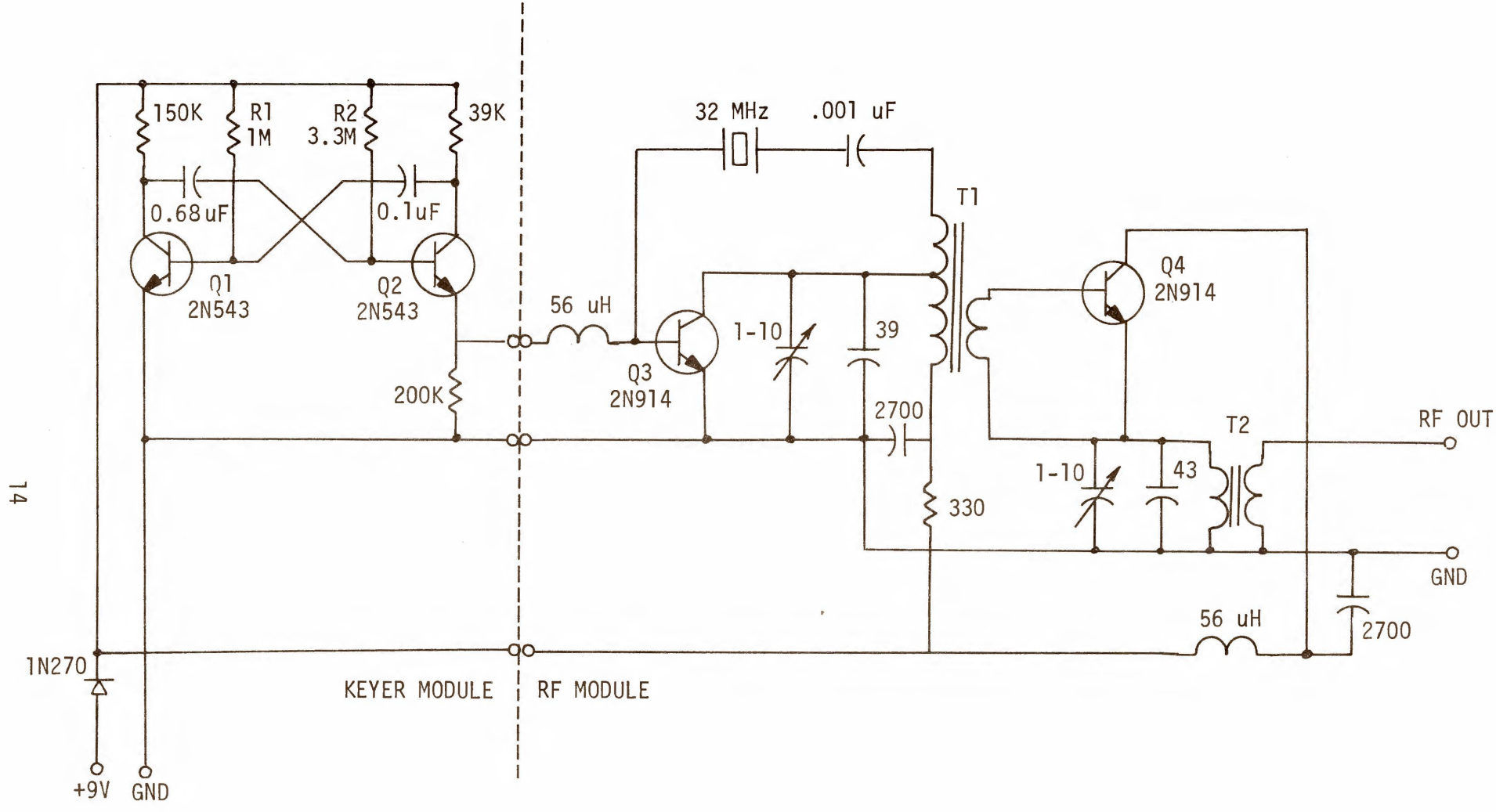

Figure 7: Circuit used in initial transmitter design

The oscillator stage, Q3, turns on when bias current is supplied by the keyer transistor Q2. The oscillator is crystal controlled and supplies 10 mW of RF power to the amplifier stage Q4. It draws no standby current in the off condition.

The power amplifier, Q4, is a class C stage with 10 dB power gain and provides an output of 100 mW. Like the oscillator, the power amplifier draws no standby current between pulses. The DC to RF efficiency of the stage is approximately 40%.

Twelve transmitters were built using the circuit shown in figure 7. The circuit was then revised to improve the stability of the pulse repetition rate and reduce the frequency pulling of the oscillator stage due to antenna detuning. The improved circuit is shown in figure 8. Its operation is basically the same as that of the first units; the oscillator circuit was changed from a common emitter to a common base configuration and the output stage from common collector to common emitter. Improved transistors were used in the keyer. The operation of this circuit was very satisfactory and it has been used in all later transmitters.

Transmitter Construction

Two methods of transmitter construction were used. One was the conventional wired method, while the other used welded module techniques.

Two views of a transmitter assembly constructed with conventional methods are shown in figures 9 and 10. The components are mounted on an L-shaped

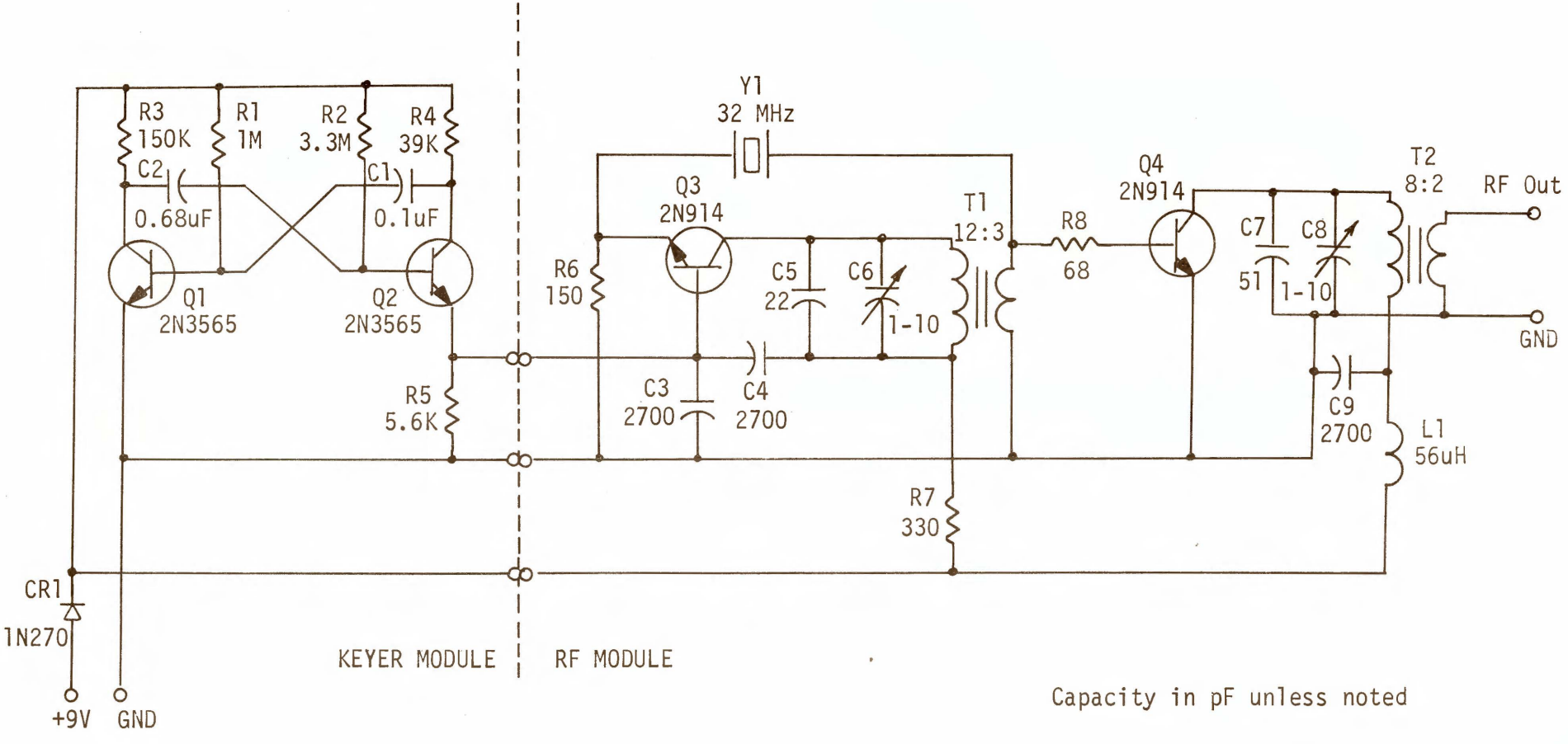

Figure 8: Final transmitter circuit

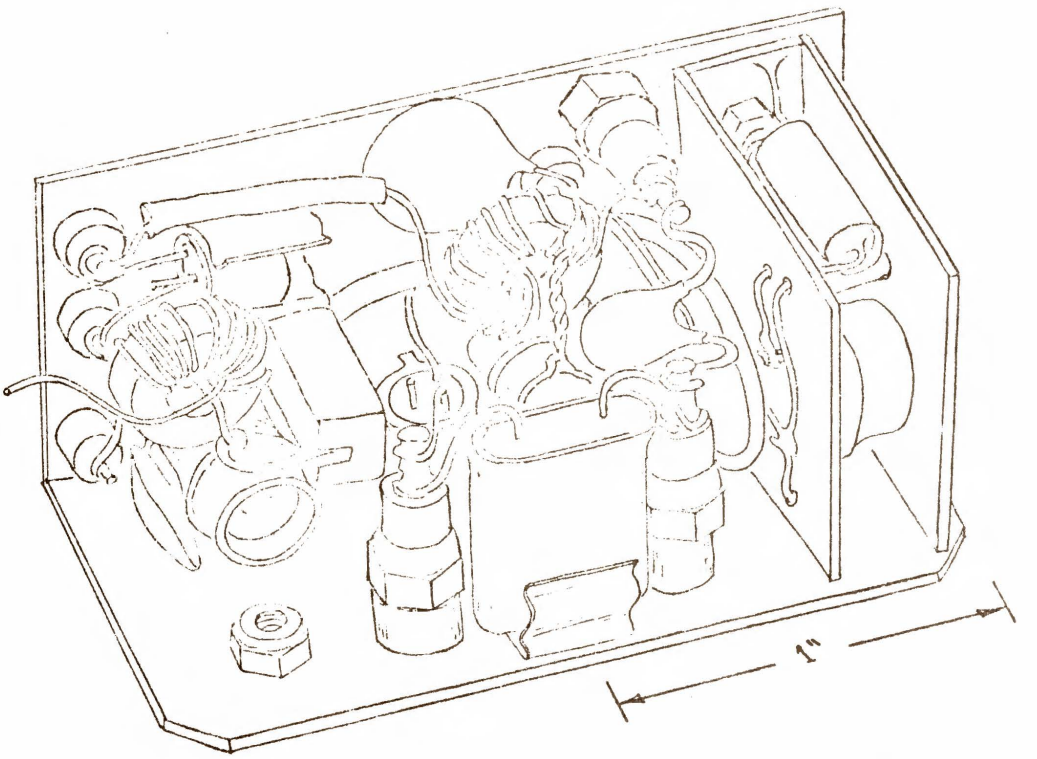

Figure 9: Front view of transmitter constructed with conventional wiring

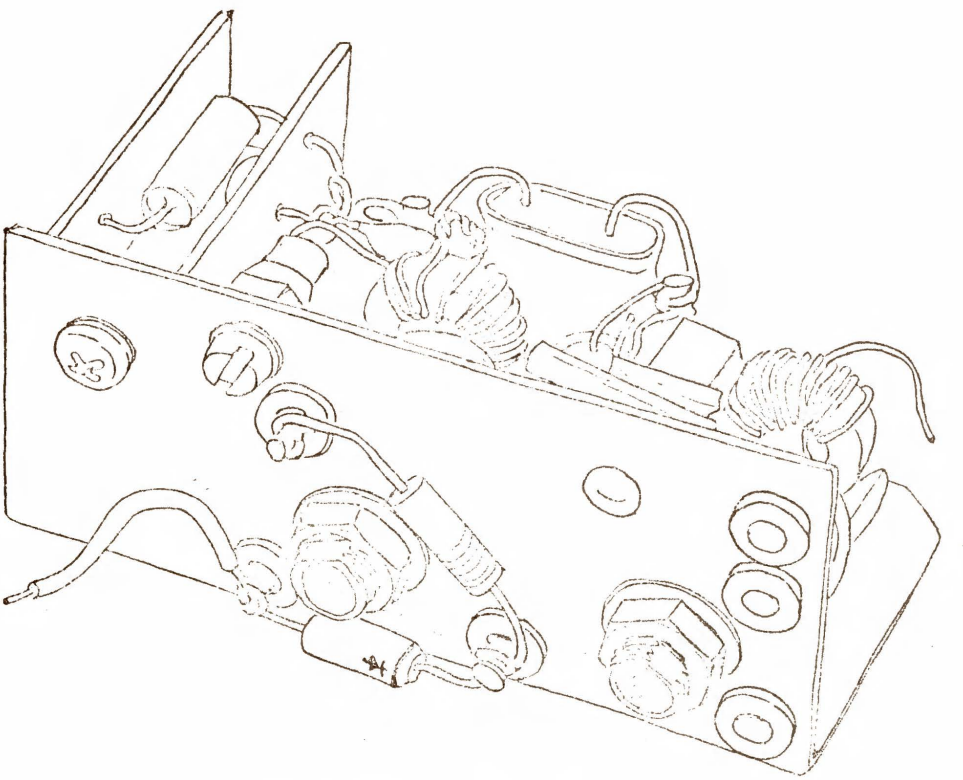

Figure 10: Rear view

aluminum chassis with standoffs and interconnected with point-to-point wiring and soldering. The keying circuit is constructed as a separate unit so that it can be easily changed if desired. The complete assembly is 1 x 1 x 2 inches in size.

Six transmitters were constructed using the welded module method in order to determine if it offered any advantages. In welded module construction, the components are stacked between two pieces of .007" mylar film. The component layout is photographically printed on each mylar sheet and holes are punched through the sheet for component leads. A mylar layout sheet is shown in figure 11. Interconnections between components are made with nickel ribbon that is fastened to each lead with a controlled energy weld. Heat sinking of the output transistor is provided by attaching it with a beryllium washer to an aluminum block which is in turn connected to the transmitter case. The entire module is encapsulated with polyurethane foam for mechanical support.

A photograph of a completed welded transmitter is shown in figure 12, and a comparison of transmitters built using the two methods is shown in figure 13.

The performance of transmitters built with either method was similar. The welded module method resulted in a slight reduction in volume and smaller performance variations due to differences in component layout and spacing. These advantages were offset by the difficulty of replacing components and the higher expense of this method for constructing small numbers of transmitters. Consequently, the welded module method was not used after

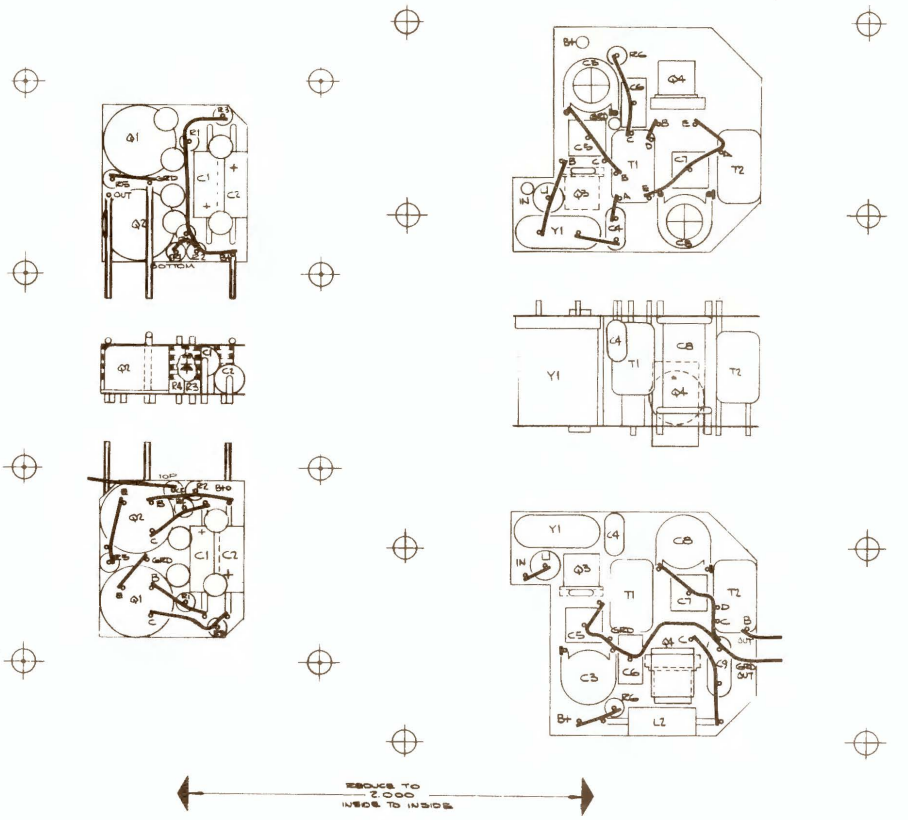

Figure 11: Mylar layout sheet for keyer (left) and transmitter unit (right)

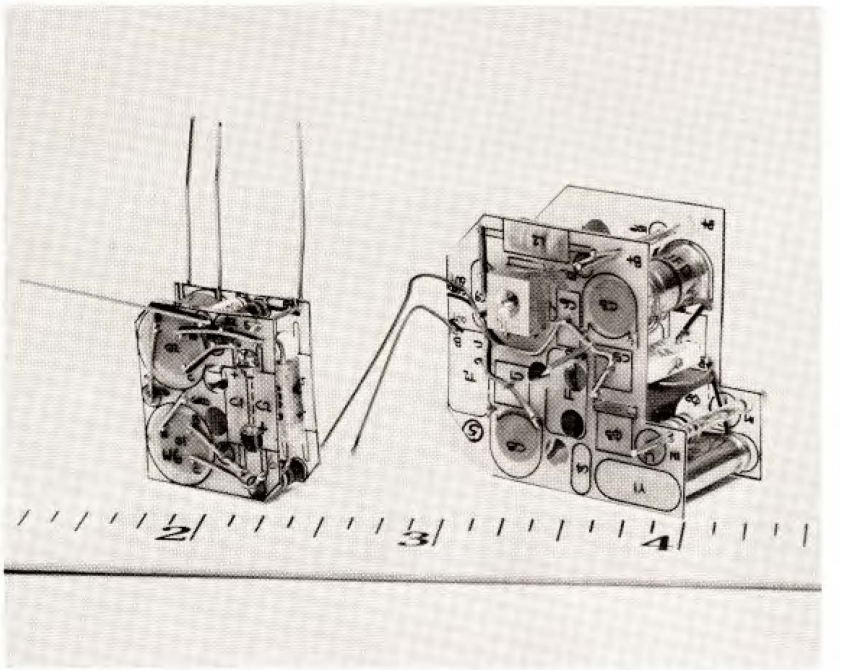

Figure 12: Welded module keyer (left) and transmitter unit (right)

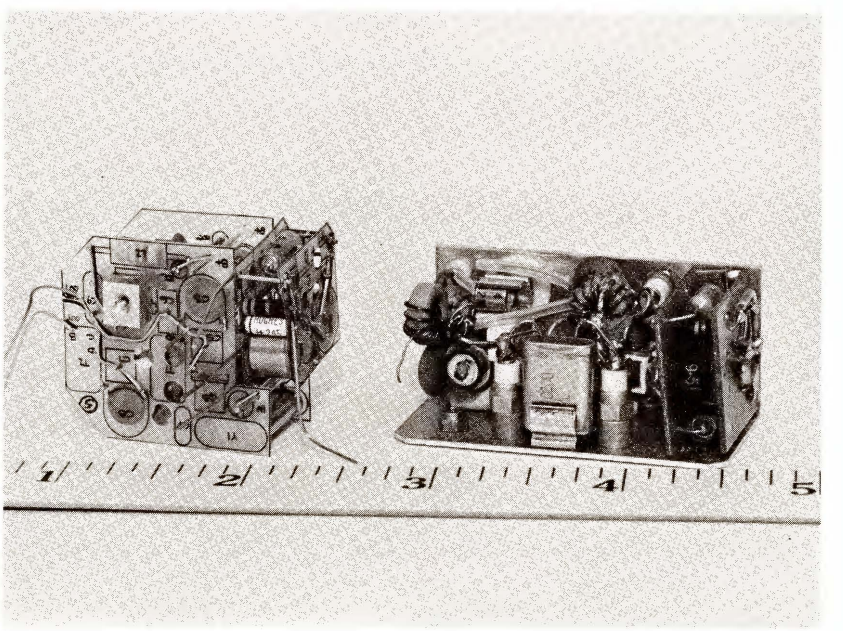

Figure 13: Transmitters fabricated with welded module construction (left) and conventional methods (right)

the initial six units.

The size and weight of the transmitter circuitry could be further reduced by the use of thick-film hybrid construction techniques. It would not be worthwhile, however, since the transmitter weight using standard construction is less than 10% of the total collar weight. Further reduction in the size of the transmitter would have little effect on the size or weight of the final collar.

Extended Life Transmitters

The 3 month battery life of the standard model transmitter does not allow an animal to be tracked for an entire season, so a modified transmitter was developed which has a longer battery lifetime. The approach taken was to reduce the transmitter operating time by switching it on and off at regular intervals with a timer circuit.

Two timers were evaluated for this application. One was an electro-mechanical timer (Bulova Accutron) and the other was a transistor switching circuit with very low standby power drain.

Accutron Timer

The Accutron timer consists of a precision clock movement using an electrically-driven tuning fork as a frequency standard. The clock movement closes a switch contact at given intervals. The switch is connected in series with the transmitter power lead and turns it on and off. Power

for the timer is furnished by a separate silver-oxide battery with an operating life of one year.

Three transmitters were built using these timers and placed on animals. One had a timing cycle of 3 minutes on at 30 minute intervals (10% duty cycle) and two had cycles of 3 minutes on and 15 minute intervals (20% duty cycle). The resulting transmitter life was more than a year in both cases and was limited by the life of the timer battery rather than the transmitter battery.

The units operated satisfactorily, but field tracking experience showed that the interval between transmissions was longer than desirable. When trying to locate the animal it was necessary either to use an accurate watch to determine when the timer should be on, or to leave the receiver on and monitor for an entire 15 or 30 minute period. A second disadvantage was the relatively high cost of the timer ($200). Accordingly, this approach was dropped in favor of the transistor timer described below.

Transistor Timer

The transistor switching circuit which was developed to replace the Accutron timer is shown in figure 14. It consists of a long time constant astable multivibrator which switches DC power to the transmitter keyer.

The multivibrator is formed by Q5 and Q6. It provides a voltage which turns switch transistor Q7 on for 10 seconds, then off for 20 seconds. When Q7 is on, it supplies voltage to the standard transmitter keyer

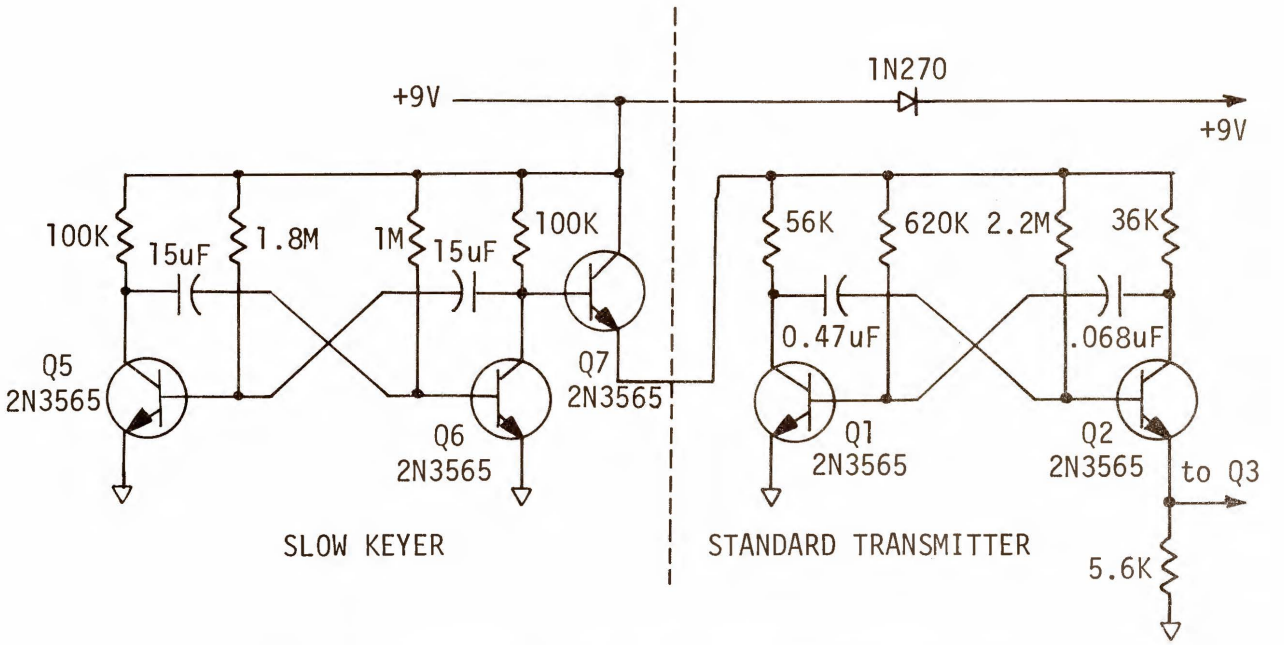

Figure 14: Extended life transmitter keyer circuit

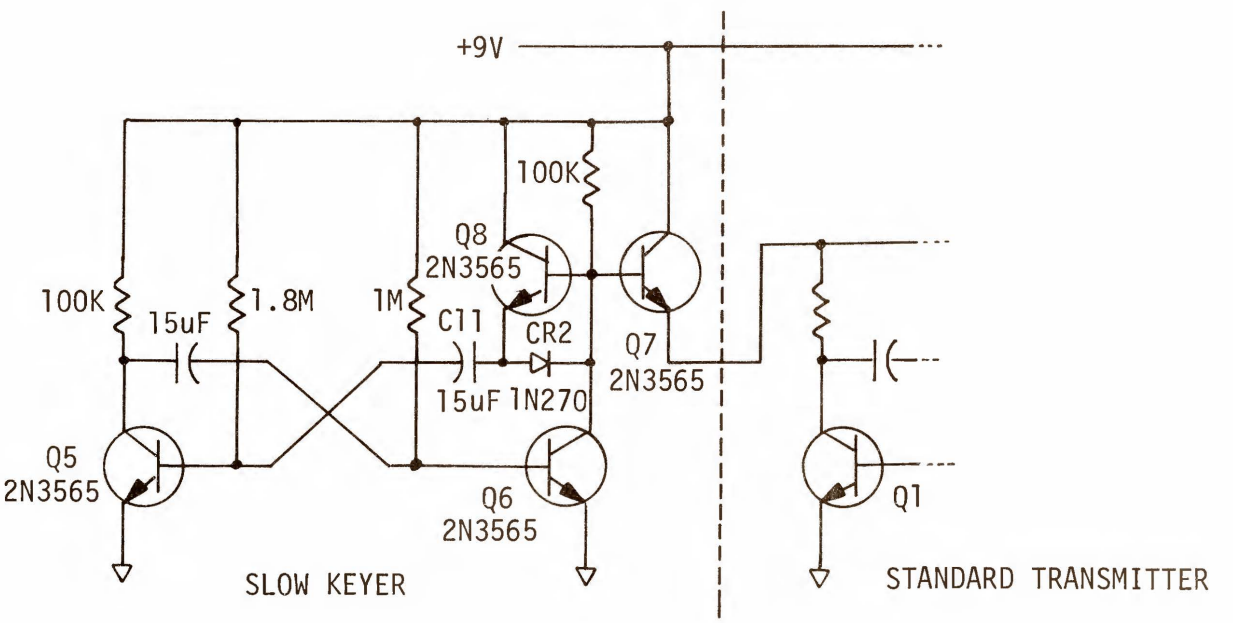

Figure 15: Improved slow keyer circuit

formed by Q1 and Q2, which turns the transmitter on and off at a rate of two pulses per second. The transmitter will thus be on for 10 seconds, emitting 20 pulses, then turn off for 20 seconds. The resulting transmitter duty cycle is 1.6%. The standby current drain of the slow keyer is 100 uA through Q6 and the average transmitter current drain is 470 uA with the 1.6% duty cycle, so the total average current drain is 570 uA. This allows 330 days of operation with the 4.5 Ah battery pack.

An improved version of the slow keyer is shown in figure 15. The addition of Q8 and CR2 reduces the charging time required for C11 and eliminates a one or two pulse variation in the number of pulses emitted by the transmitter when on. The operation of the circuit is similar to that of figure 14 in other respects.

The 10 second on period was usually sufficient to allow a directional bearing to be taken. The 20 second interval between on periods was much more satisfactory for field tracking than the 15 minute interval of the Accutron timer.

RECEIVERS

A portable transistorized receiver was used for tracking operations both on foot and from base and mobile stations. Various antennas were connected to the receiver, depending on the location in which it was used.

Some initial work was done with standard communications receivers early in the project, but these were discarded in favor of the portable units.

Several versions of the portable units were used during the course of the study as improvements were made. The various receivers are described below.

Communications Receivers

Standard tube-type short wave communication receivers were used at the base and mobile stations in the initial stages of the project. These included a National NC109, National NC188, and a Hallicrafters SX-71 receiver. A Dow-Key antenna preamplifier was used with these units for increased sensitivity. Power for the receivers and preamplifier was provided by a 12 VDC to 120 VAC 150 watt power inverter operating from the vehicle battery for mobile stations or by a 1.7 kW gasoline motor-driven generator at the field station.

The use of these receivers was discontinued as soon as the development of the transistor receiver had proceeded far enough to result in reliable operation. The disadvantages of the communication receivers were large size and weight, the requirement for 120 VAC power, and the need for manual frequency tuning. The variable tuning of the receivers was especially bothersome when trying to locate an animal, since some uncertainty always existed when no signal was received as to whether the animal was out of range or the receiver was mistuned. A test transmitter was generally used to alleviate this problem; the receiver was tuned with transmitter on, then the transmitter was turned off and a search made for the instrumented animal by rotating the antenna.

Modulated Input Receiver

The first transistorized portable receiver which was tested used an input signal modulation method to produce an audible signal at the receiver output. The antenna and modulation circuitry is added to a modified receiver section of a Citizen's Band transceiver.

A diagram of the modulation circuit is shown in figure 16. The 32 MHz signal from the loop antenna is fed to a balanced modulator and amplitude modulated with a 1 kHz sinewave from the oscillator. The modulated signal is then fed into the RF input of the receiver and amplified and detected in the usual way. In order to suppress receiver noise when the loop antenna is nulled and no signal is present, an unmodulated signal from the whip antenna is added to the input channel. Since this signal is unmodulated it gives no audible output, but its presence improves the signal-to-noise ratio during operation.

Field tests of this receiver showed it to be slightly less sensitive than one using a BFO (described in the following section). It is also somewhat more complex than the BFO receiver and less adaptable to use with different types of antennas. This approach was therefore dropped in favor of the one described below.

BFO Receiver

The most satisfactory performance was obtained with a receiver using a beat frequency oscillator (BFO) to produce an audible signal when receiving

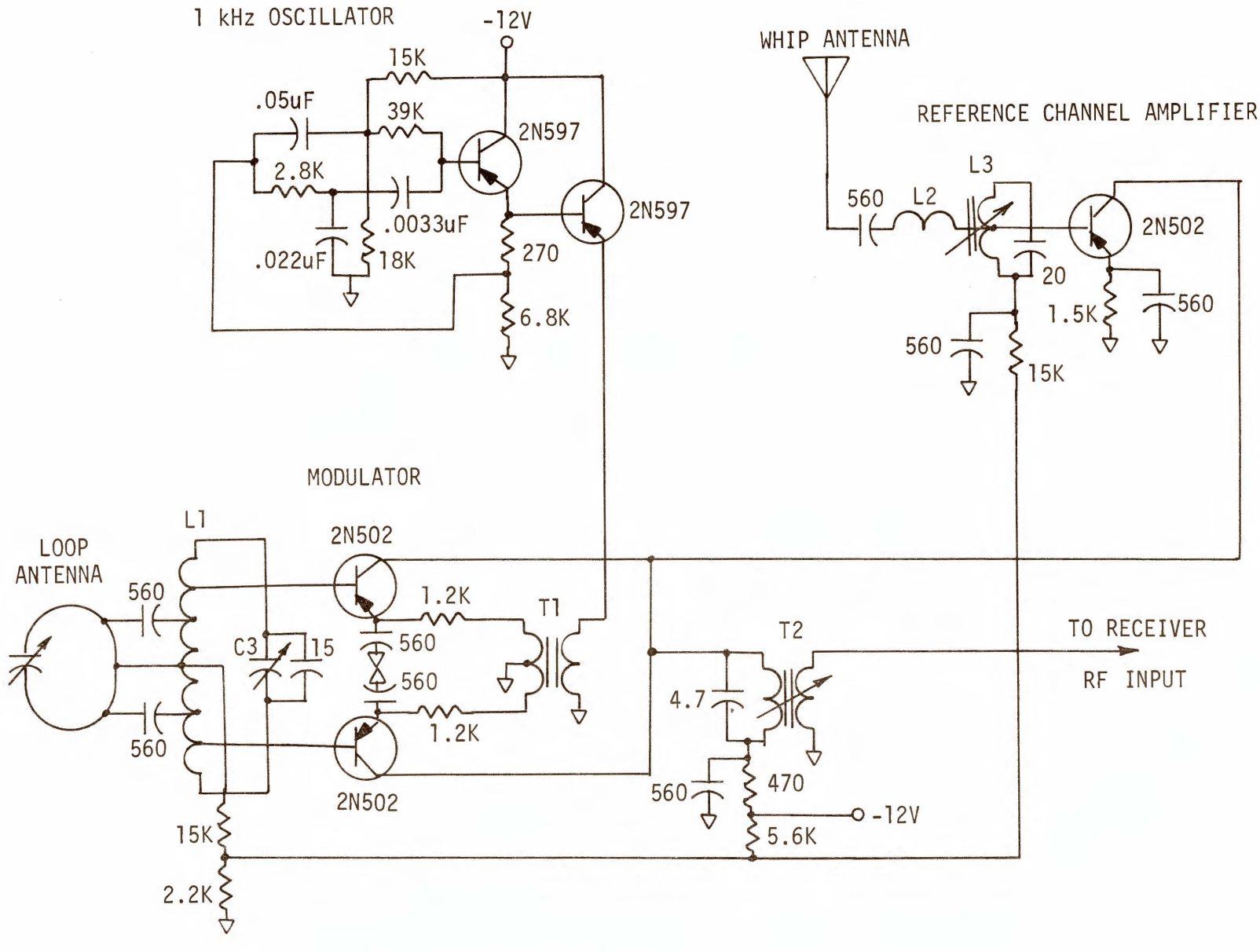

Figure 16: Input stage for modulated receiver

the unmodulated signal from the transmitter. This was the approach used in the final receiver design. A photograph of one of the portable receivers is shown in figure 17.

The receiver consists of a modified receiver from a Citizen's Band transceiver and a directional loop and sense antenna. The receiver modifications include changes in the RF amplifier and local oscillator stages to shift the receiving frequency from 27 to 32 MHz and the addition of the BFO.

Three types of transceiver were used in various models of the receiver. Initial units were constructed from Osborne Model 100 and Com-Pak model 800 transceivers. The final design utilizes a Cadre C-75 receiver subassembly with a specially designed audio amplifier and BFO.

Circuit diagrams of the audio amplifier and BFO are shown in figures 18 and 19. The audio amplifier is an integrated circuit type which provides 50 mW of audio power to the speaker. The BFO can be operated either as a fixed-frequency 456 kHz oscillator with the frequency determined by a ceramic resonator element, or in a variable frequency mode.

The interconnections of the BFO and audio amplifier to the Cadre receiver subassembly are shown in figure 20.

Power for the receiver is supplied by a 12 volt, 225 mAh rechargeable nickel-cadmium battery which will provide 10 hours of continuous operation. Earlier receiver models operated on carbon-zinc batteries which were responsible for poor performance at temperatures near and below freezing. The nickel-cadmium batteries have superior low temperature



Figure 17: Portable directional receiver

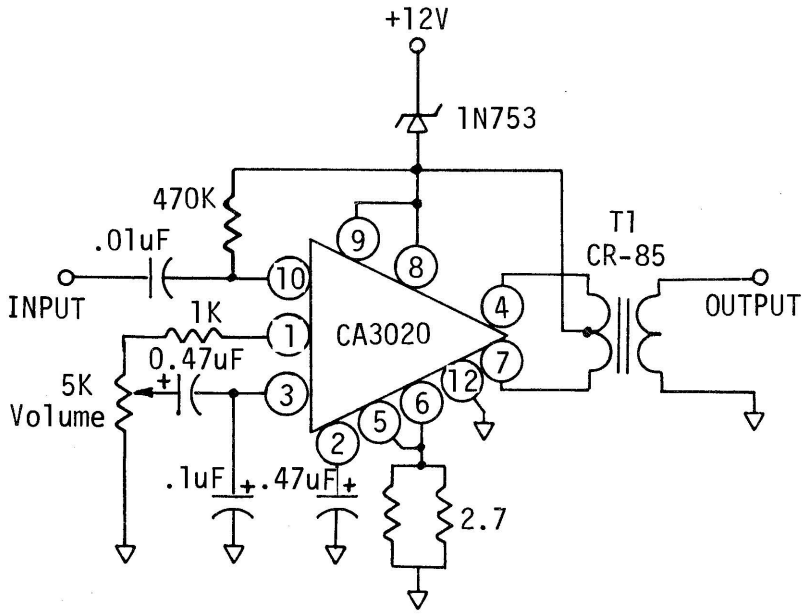

Figure 18: Receiver audio amplifier circuit

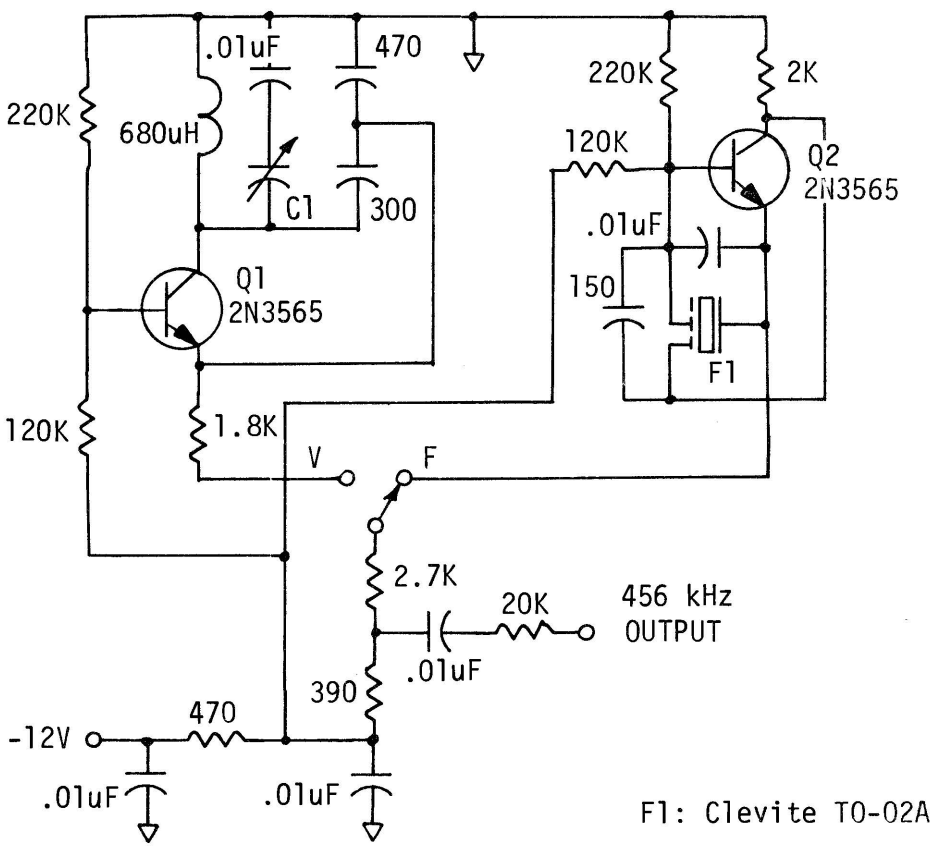

Figure 19: Receiver beat frequency oscillator circuit

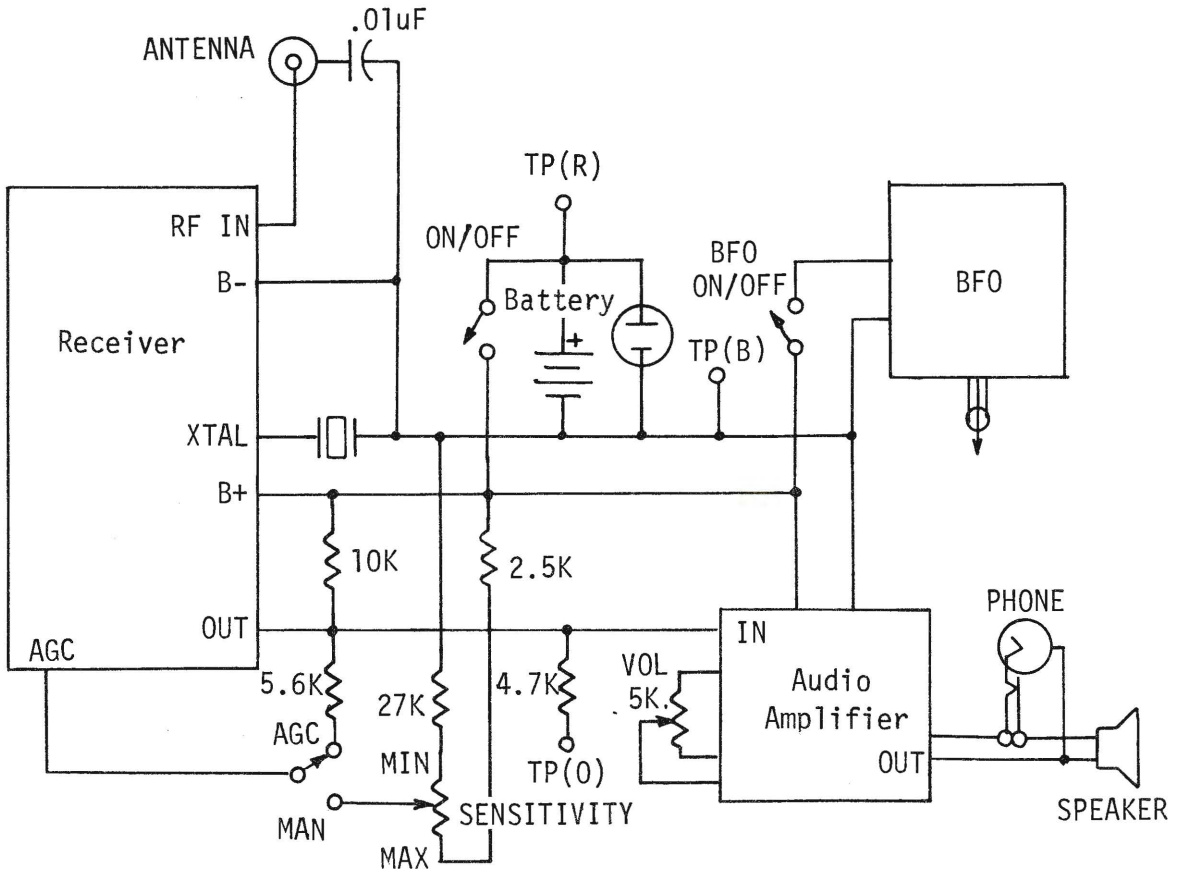

Figure 20: Receiver subassembly interconnections

characteristics and have been very satisfactory in winter field use.

A summary of the performance characteristics of the receiver was given in table 2.

Receiver/transmitter for voice communication

Two portable receivers were evaluated which had the transmitter portions of the basic transceiver retuned to 32 MHz and connected for operation. This made communication possible between two persons tracking an instrumented animal without the need for additional equipment.

An off/on switch for the BFO was added to the modified receivers, since the BFO interferes with a modulated voice signal. The loop antenna is directional, so it is necessary to orient the antenna properly when transmitting or receiving voice signals. It is possible to concentrate the transmitter power in one direction and obtain a 3 dB increase in signal strength by depressing the sense antenna switch.

Although successful operation was obtained, the units did not prove to be particularly useful in the field. Their range was limited (less than a mile under most conditions), and the directivity of the antenna required that the direction of the other party be known. Tracking of instrumented animals was seldom undertaken with two parties, and better communications between parties in the few cases where it was necessary could be obtained by carrying separate Citizen's Band transceivers. After initial field testing, the transmit feature was eliminated from the receiver design.

ANTENNAS

Various antennas were used with the receiver described in the preceding section, depending on the range and degree of mobility desired when tracking. While travelling on trails or cross country, the loop antenna was used in most cases. Larger antennas were used when longer ranges were required and included a 3-element yagi, a 5-element yagi, and a quad antenna. The application and performance of these antennas is described below.

Loop Antenna

The directional loop antenna is 11 inches in diameter and consists of two turns of ¼" copper tubing. Capacitive tuning resonates the loop inductance at the 32 MHz operating frequency and an inductive tap transforms the antenna impedance to the 50 ohm receiver input impedance.

The loop antenna provides the most accurate bearings of any of the antennas used because its pattern has two sharp nulls which allow determination of the direction of a received signal within a few degrees. Due to its small size in comparison to a wavelength (10 meters at 32 MHz), however, it is a relatively inefficient antenna and is most useful at shorter ranges than the others.

A sense antenna was used to resolve the ambiguity in bearing which results from the symmetrical pattern of the loop. It consists of a 40" vertical whip centered 1" from the loop plane. The sense antenna

is inductively loaded to resonate at the operating frequency. No direct electrical connection is made between the loop and whip antennas, the desired interaction being furnished by magnetic coupling between the parallel portions of the two antennas.

A measured antenna pattern for one of the receivers is shown in figure 21. The sense antenna provides 13 dB suppression of the reverse lobe and 3 dB enhancement of the forward lobe, giving a 16 dB front-to-back ratio. The receiver is normally operated with the loop antenna alone. When a single-lobe pattern is desired for ambiguity resolution, the sense antenna is activated by depressing a pushbutton switch which connects the antenna loading inductor to chassis ground.

Yagi Antennas

Yagi antennas were used at the base station, field station, and from vehicles to obtain longer ranges than were possible with the loop antenna.

Figure 22 shows 3-element antennas (Hy-Gain model 113-B) in use at a field station and from a vehicle. The field station antenna illustrated was permanently erected and rotated by means of a TV antenna rotator powered by a gasoline motor-driven generator. The antenna mast could also be rotated by hand if desired.

The vehicle-mounted antenna was connected to a collapsible 20 foot mast which was erected at the desired location by lowering the antenna and mast to a horizontal position, extending and locking the mast sections, and then

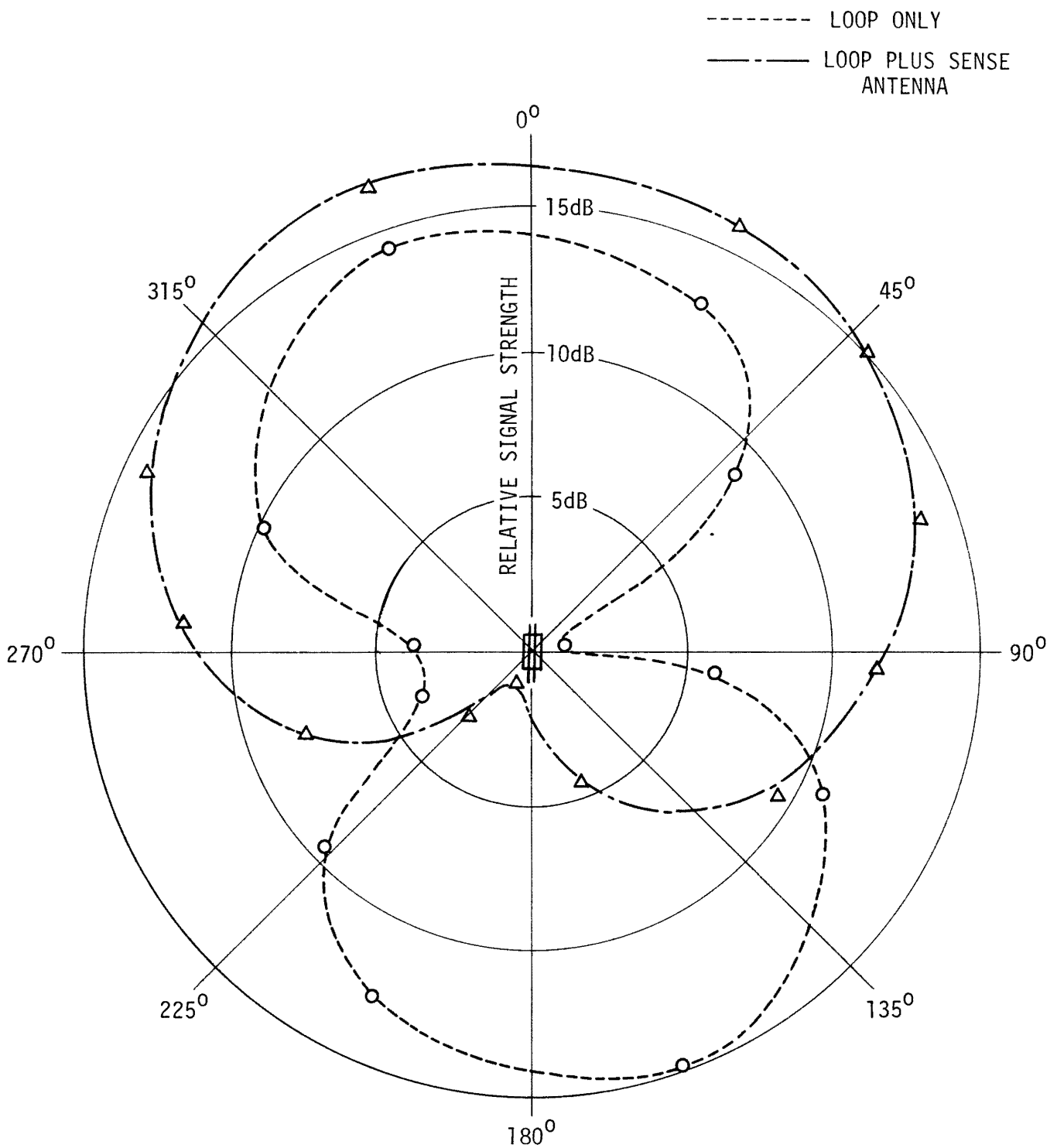

Figure 21: Portable receiver antenna patterns



Figure 22A: Hilltop field station

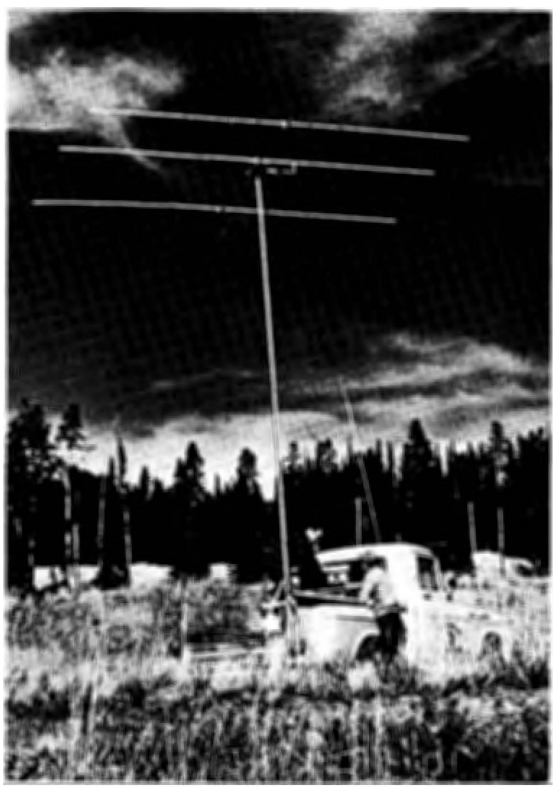

Figure 22B: Mobile Station

raising the mast to vertical. The antenna was rotated by hand.

Since the pattern of the 3-element antenna is quite broad (60° between 3 dB points), more difficulty is encountered in obtaining accurate directional bearings than with the loop. The antenna can be turned through a wide angle with little change in signal strength. The procedure that resulted in the most accurate bearings was to turn the antenna until the signal disappeared on either side, then bisect the angle formed by the two fade-out points.

A photograph of the 5-element yagi (Mosely model YB-30-5) used at the base station in Canyon Village is shown in figure 23. It was mounted on a 30 foot tower and rotated with a TV antenna rotator motor. The antenna pattern is somewhat narrower (47° between 3 dB points) than the 3-element antenna but best bearings were still obtained by bisecting the angle between fade-out points as described above.

Quad Antenna

A two-element quad antenna was used for long-range tracking when it was necessary to carry a high gain antenna to remote locations on foot. The antenna can be easily disassembled for transporting and erected at the tracking site.

A photograph of the quad antenna is shown in figure 24. It consists of two one-wavelength perimeter loops arranged in a parasitic array, with one loop acting as a driven element and the other as a reflector. Its gain is



Figure 23: Five element yagi base station antenna

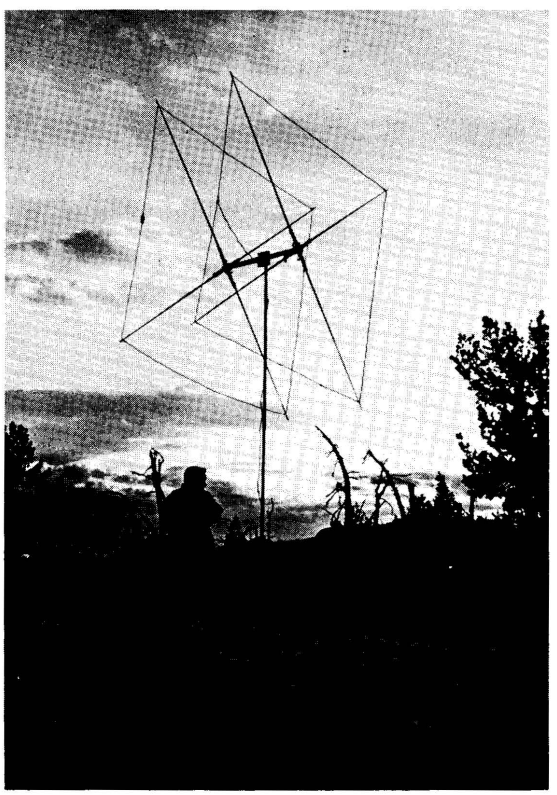

Figure 24: Quad antenna

approximately the same as a 2-element yagi antenna (5 dB), and its pattern width is 100 degrees between 3 dB points. The wire loops, fiberglass spreader arms, and spreader support come apart so that the antenna may be carried in several pieces. The total weight is about 15 lbs.

Polarization Considerations

For maximum radio transmission range, the polarization of the receiving antenna must be the same as that of the transmitting antenna. The loop antenna placed on the instrumented animal radiates a wave polarized in the plane of the loop, which is typically vertical. It might be expected that vertically polarized receiving antennas would give best results.

Field experience showed no discernable differences in range when using vertical or horizontally polarized antennas. The reason for this is probably that in the typical tracking situation the signal path between transmitter and receiver is not line-of-sight and the signal is usually reflected several times from trees and natural features of the terrain. Since polarization changes when reflections occur, the polarization of the received signal is probably random.

The receiver loop and quad antennas are vertically polarized, and the yagi antennas are horizontally polarized. There is probably some advantage to vertical polarization in the case of the loop, since it is used in closer proximity to the transmitter than the other antennas and would be more likely to be receiving vertically polarized waves. In the case of the yagi antennas, however, the horizontal polarization was selected because

it simplified mounting and transporting without seeming to affect performance.

Antenna Performance Comparisons

The increase in system range obtained by using a higher gain antenna can be predicted from the gain difference; a 6 dB increase in gain will double system range, all other factors being equal. In practice, other factors that affect range in addition to antenna gain are polarization, height of the antenna above ground, and the electrical characteristics of the ground itself.

The relative range of each of the antennas based on gain differences alone is as follows:

Antenna	Gain	Range factor
Loop	-10 dB	1
Quad	5	5.6
3-element yagi	7	7.1
5-element yagi	9	8.9

The theoretical range factors agree roughly with the typical system ranges summarized in table 3 previously.

2. TELEMETERING EQUIPMENT

Methods and equipment were developed during the course of the study to expand the capability of the basic radio location system to include telemetry of environmental and physiological data from instrumented animals. Parameters which were monitored included ambient temperature, body temperature, activity, and heart rate (EKG). The design and performance of the equipment for each of these parameters is summarized in the following sections.

SELECTION OF MODULATION METHODS

Many different types of modulation can be used to transmit the desired telemetry information. The common types are amplitude, frequency, phase, pulse amplitude, pulse position, pulse frequency, pulse duration, and various pulse coding schemes. Each has certain advantages and disadvantages depending on the form of information to be transmitted, available transmitter power, required range and interference rejection characteristics, and many other factors.

In this case it was desirable to add telemetering capability to the already-existing tracking system with a minimum of additional equipment or complexity.

Since the directional receivers were AM types, the phase and frequency modulation approaches were immediately eliminated. Conventional amplitude modulation was not considered since it requires a continuous signal and

results in high transmitter power consumption. Pulse modulation is attractive because systems can be designed which require less average power than AM or FM modulation; this is accomplished by using transmitter designs which draw no power between pulses, reducing the average duty cycle and extending the life of the transmitter batteries. There is little difference between the various types of pulse modulation in terms of transmitter power drain, so other factors determined the final choice.

Pulse frequency modulation with a repetition frequency slow enough for audible counting by an observer was chosen for ambient temperature, activity, and one of the body temperature systems. This approach has the advantage that it can be used either with or without automatic demodulating equipment. The system range is much greater (3 times or more) when the counting is done by an observer since the human ear is capable of discerning a lower signal-to-noise ratio than meters or simple detection circuitry.

Pulse frequency modulation with a faster repetition frequency (200 pps) was used for the EKG system and pulse duration modulation was used for one of the body temperature systems. Both require demodulation equipment and are limited to shorter ranges than the other systems. The higher repetition frequency was required for the EKG system because of the frequency of the waveform information being transmitted. Pulse duration modulation was more compatible with the accuracy requirements of the body temperature system. These considerations are discussed in more detail in the sections covering these systems.

AMBIENT TEMPERATURE

Several kinds of equipment were designed for monitoring and recording ambient temperatures. These include two types of temperature telemetering transmitters, a pulse counting circuit, and a temperature recording adapter.

Collar Transmitter

Two standard tracking transmitters were modified so that their pulse rate varied linearly with temperature. The temperature of the collar could be determined by counting the number of pulses transmittted in a given time period. These collars were used for measurement of ambient temperature in inaccessible locations and for an investigation of the degree of transmitter warming occurring due to the animal's body heat. The latter information was useful in predicting transmitter battery life since battery capacity is a function of temperature.

The temperature-dependent pulse rate was obtained by replacing R2 in the keyer circuit (see figure 8) with a 1 megohm thermistor and a 1 megohm resistor in series, and reducing the value of R3 from 150K to 56K. The resulting pulse rate vs. temperature characteristic is shown in figure 25.

The accuracy of measurement with this circuit is reasonably good, the main source of error being a decrease in pulse rate with battery voltage toward the end of life or under extremely cold conditions. The decrease in pulse rate is accompanied by a proportionate decrease in pulse width, however, so that this source of error can be elininated by monitoring the

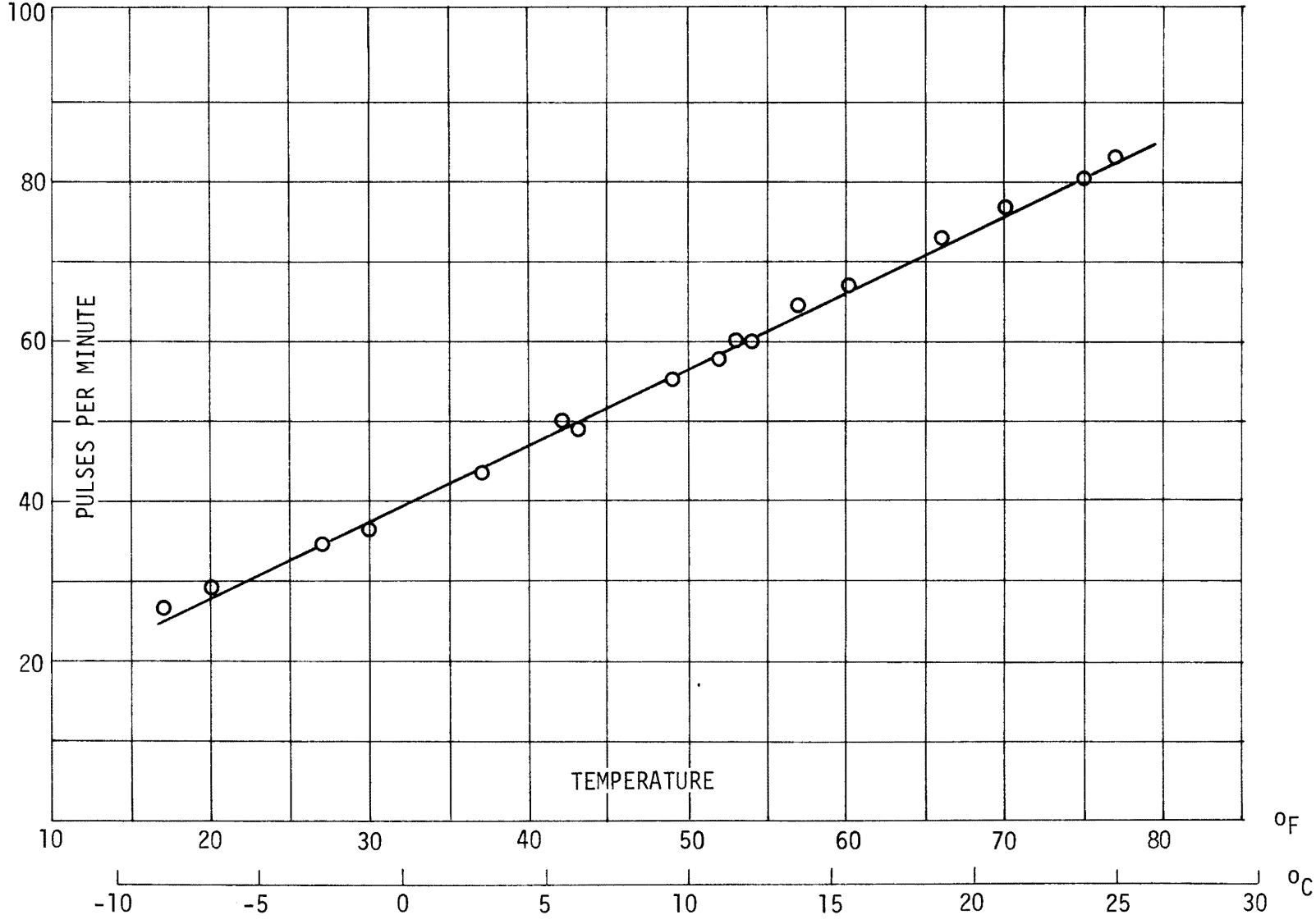

Figure 25: Pulse repetition frequency vs. temperature for temperature sensitive transmitter

received waveform and making appropriate corrections. The pulse rate change after the battery is 90% discharged is about 10%, which corresponds to a temperature error of 3.3°C. This error can be reduced to 1°C by making pulse width corrections when better accuracy is required.

Environmental Monitoring Transmitter

An improved temperature-sensitive transmittter was designed for measuring a wider range of temperatures than the collar units. The transmitter was not intended for use on animals and was mounted in a 2 x 2x 3 inch chassis box with a removable whip antenna. Temperature was sensed by an internal thermistor or a thermistor probe on a 50 foot cable.

A circuit diagram of this transmitter is shown in figure 26. A precision resistor R1 forms a voltage divider with the thermistor, giving a temperature dependent voltage. This voltage is applied to an emitter follower Q2 which acts as a current source and controls the frequency of the astable multivibrator formed by Q3, Q4, and Q5. Q1 is connected as a diode and compensates for the changes in the base-emitter voltage of Q2 with temperature. The mulitvibrator turns the transmitter circuit (Q6 and Q7) on for 50 ms pulses at a rate determined by the thermistor temperature.

A pulse rate vs. temperature curve for the transmitter is given in figure 27.

This unit has been used to monitor air temperatures during winter in thermal areas in Yellowstone Park (1) and on other occasions. Its performance has been very satisfactory.

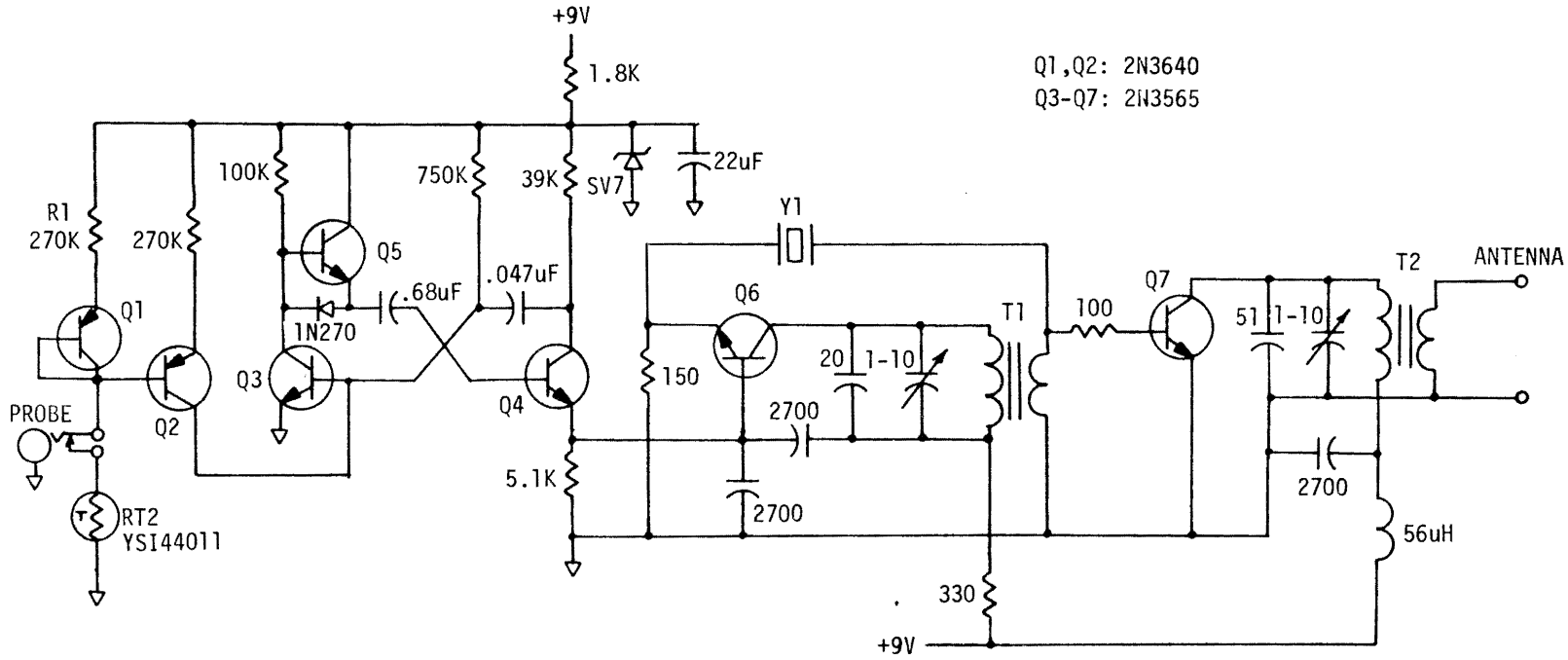

Figure 26: Environmental temperature transmitter circuit

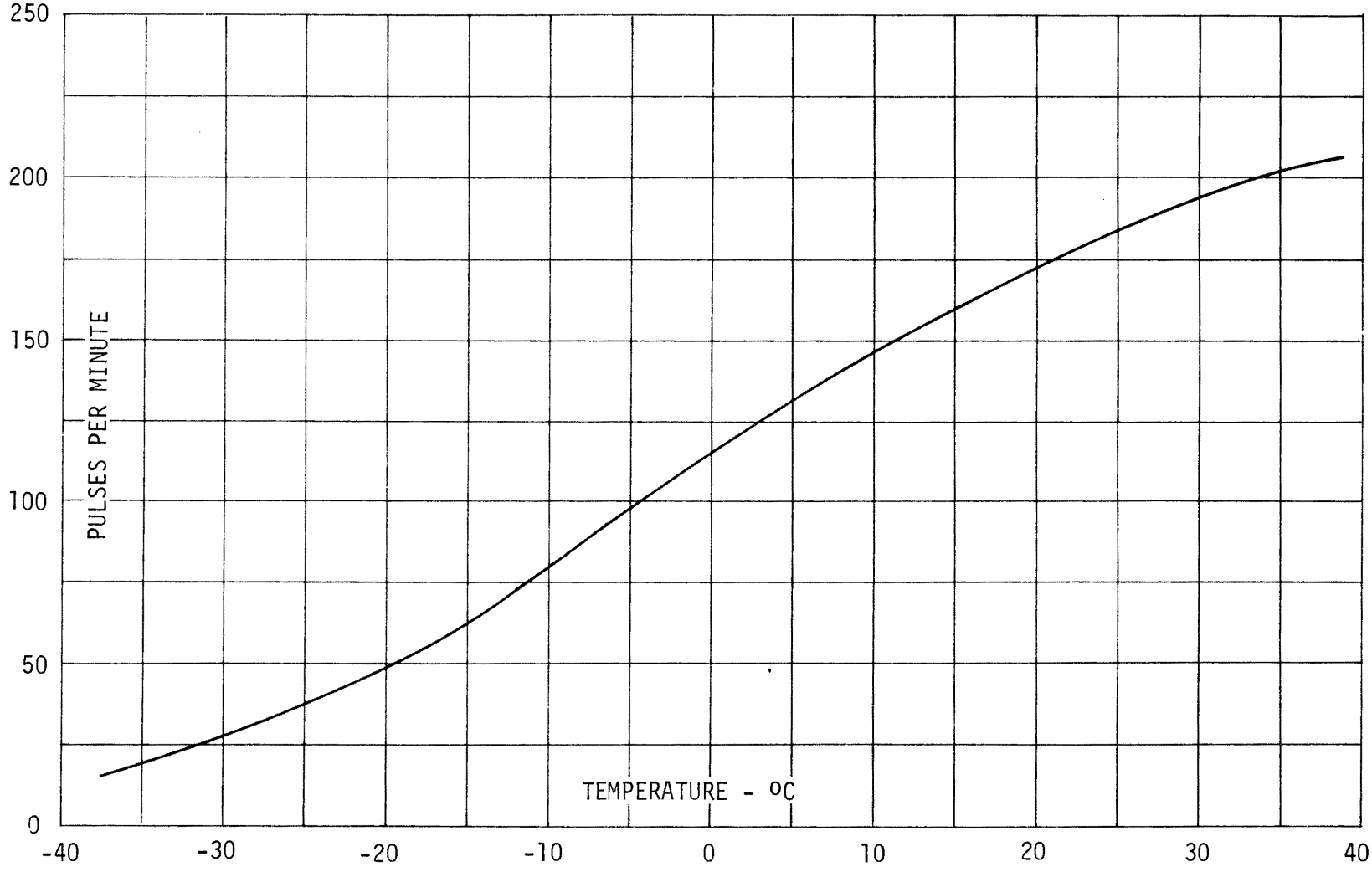

Figure 27: Pulse rate vs. temperature for environmental temperature transmitter

Pulse Counting Circuit

A pulse counting circuit was designed for use with the above transmitters and others described later. When used with a tracking receiver, it enables either a meter readout or chart recording to be made of the number of pulses per minute sent by a transmitter. This allows data to be recorded continuously for periods of time up to several days.

A circuit diagram of the pulse counting circuit is shown in figure 28. A demodulated pulse from the receiver detector is first passed through an integrating circuit to prevent false triggering due to noise spikes. The integrated pulse is used to trigger a monostable multivibrator circuit formed by Q4 and Q5. The level at which the monostable circuit is triggered is adjusted by the threshold circuit formed by Q2 and Q3. The output of Q5 is averaged by an operational amplifier integrator, A1. The average DC voltage level at the output of A1 is displayed either on a milliammeter or a chart recorder. Ranges of 0 to 200 or 50 to 150 pulses per minute are selected by switching between two resistor networks which change the resistance and offset voltage in series with the meter.

Temperature Converter for Chart Recording

In addition to the telemetry equipment for ambient temperature described above, an adaptor circuit was designed which converts a 1 mA chart recorder into a temperature recorder. A thermistor probe on a 100 foot cable is connected to the adaptor circuit and recorder. This equipment can be used to make temperature recordings in situations where the longer range

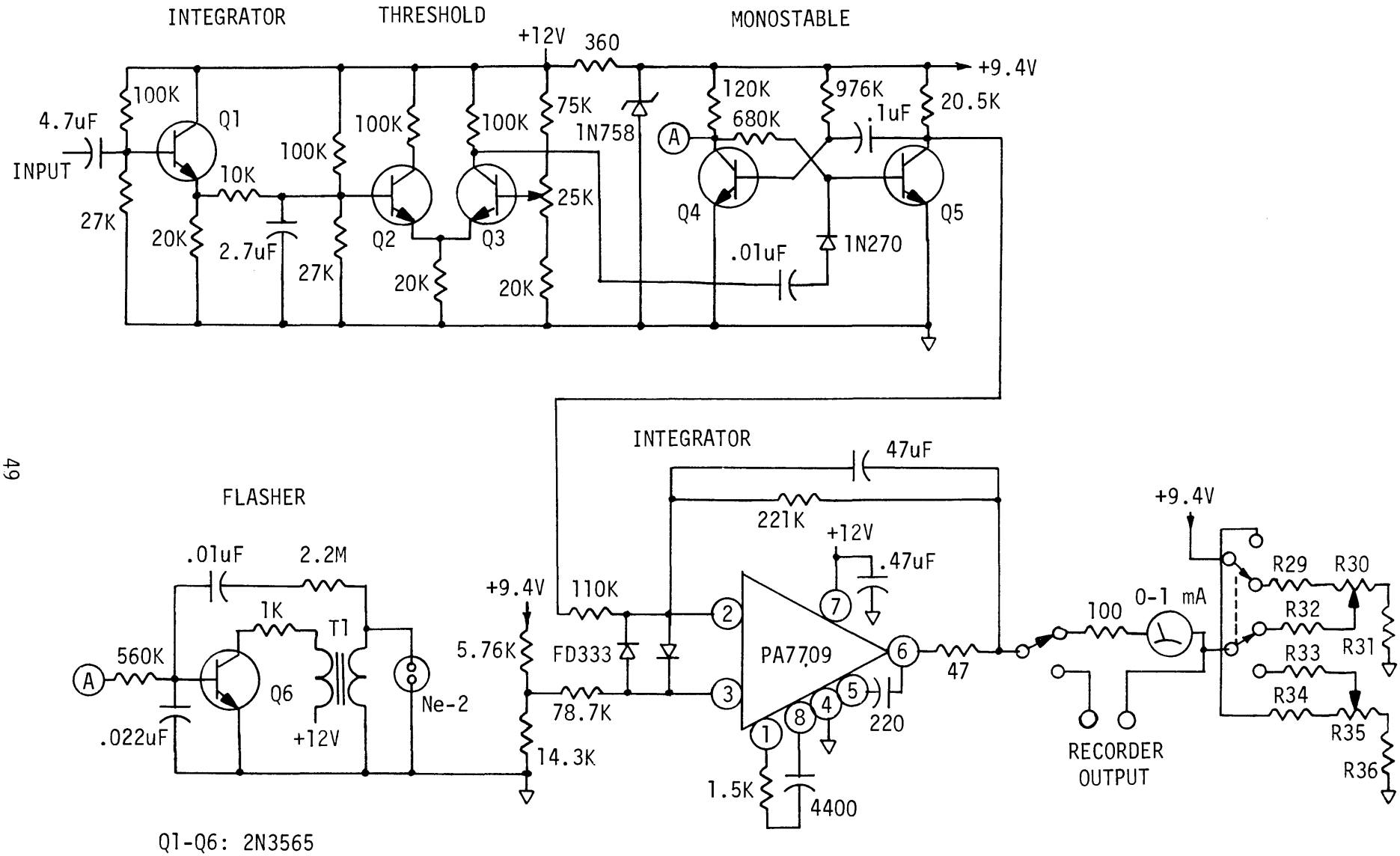

Figure 28: Pulse counting circuit

of a radio system is not required.

A circuit diagram of the converter circuit is shown in figure 29. A 1000 ohm thermistor and a precision resistor R2 form a voltage divider which is supplied from a zener diode stabilized voltage source R1 and CR1. The ratio of R2 to the thermistor resistance is chosen for optimum linearity over the desired temperature range from -40 to +40°C. The output of the voltage divider is applied to a unity gain emitter follower amplifier stage, Q1, which supplies current to the milliammeter in the recorder. CR2 provides temperature compensation. The converter battery may be tested by depressing the pushbutton switch S2.

The converter circuit and battery are mounted in a 2 x 2 x 3 inch chassis box with a mating plug so that the unit may be connected to the input terminals of a Rustrak model 88 chart recorder. The thermistor probe and cable are connected to the converter with a phone plug.

BODY TEMPERATURE

Two types of body temperature telemetering systems were designed and field tested. Both consisted of a transmitter collar placed around the animal's neck and a temperature-sensitive thermistor probe which was placed beneath the skin in the neck area. The probe was connected to the transmitter by a short cable. Temperature information was transmitted to the observer in the form of a variable pulse rate or pulse duty cycle.

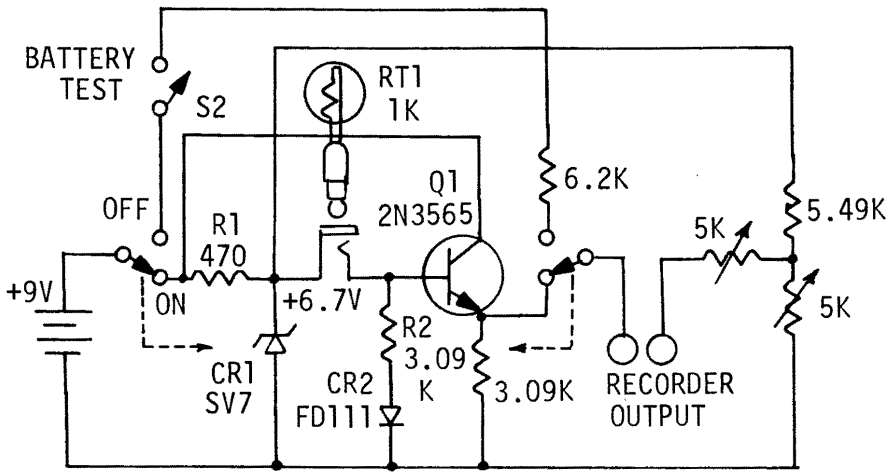

Figure 29: Temperature converter for chart recorder

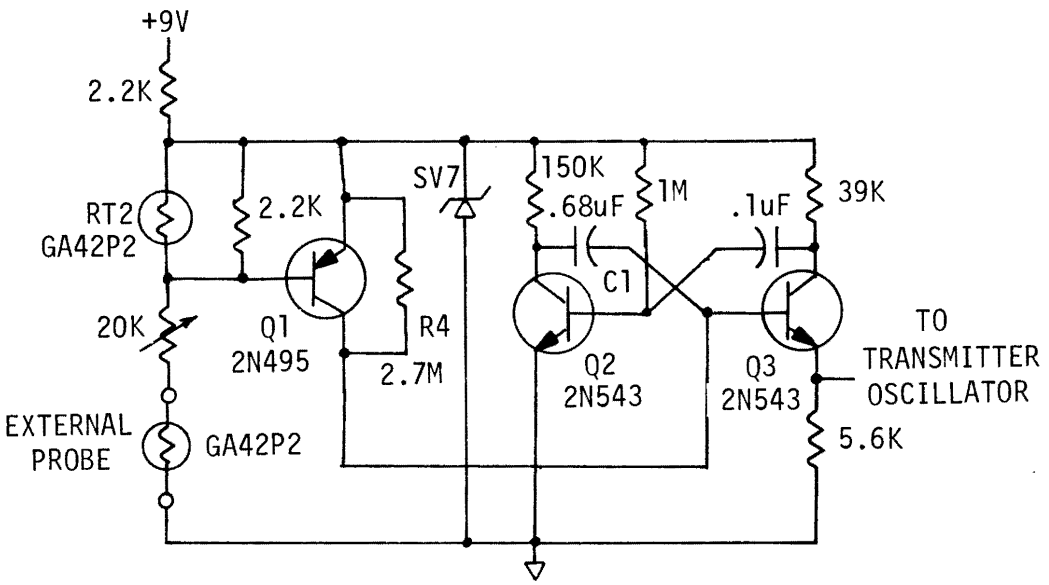

Figure 30: Keyer portion of body temperature transmitter

Single Channel Body Temperature System

The single channel body temperature telemetering transmitter was similar to the ambient temperature transmitter discussed earlier. The pulse rate was optimized for operation in the 35 to 40°C range and the temperature sensitivity of the transmitter was increased so that a large change in pulse rate would result from a small change in temperature.

The circuit diagram of the transmitter is shown in figure 30. Transistor Q1 acts as a current source for the timing capacitor C1 of the astable multivibrator formed by Q2 and Q3. Variations in the resistance of the thermistor probe RT1 cause changes in the collector current of Q1, which in turn changes the charging rate of C1 and varies the pulse rate of the transmitter. Thermistor RT2 provides compensation for collector current variations due to changes in the temperature of Q1. R4 permits a small leakage current around Q1 which determines the minimum pulse rate of the transmitter; this is necessary to prevent the keyer from turning completely off if the temperature of the thermistor drops much lower than intended (which would occur if the probe came loose from the animal in cold weather). A zener diode CR1 insures that the accuracy of the circuit will not be affected by battery voltage variations with age or temperature.

A pulse rate vs. temperature curve for the transmitter is shown in figure 31.

It was not possible to completely eliminate ambient temperature effects on the transmitter pulse rate with constant probe temperature, since the ambient temperature was varying over nearly 30°C while the probe temperature

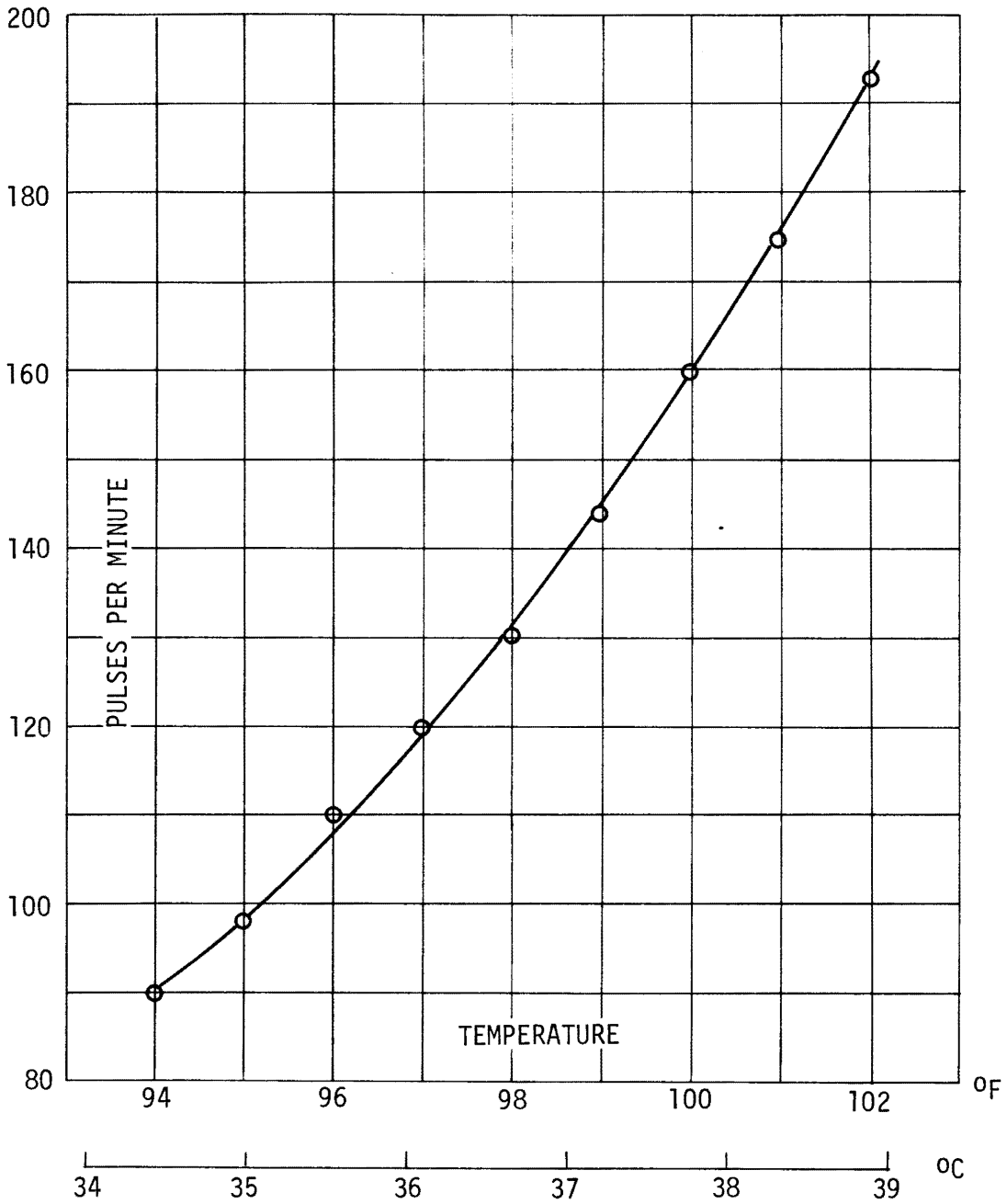

Figure 31: Pulse rate vs. temperature for single channel body temperature transmitter

varied only a degree or two. The error in indicated body temperature due to ambient temperature changes is on the order of $0.5^{o}C$. This error can be eliminated by applying an ambient temperature correction to the indicated body temperature.

A second probe was constructed which contained not only the sensing thermistor RT1 but also Q1 and its associated components. This removed any pulse rate variation due to ambient temperature since all the critical components were held at a nearly constant temperature by the animal's body heat. The size of the probe was increased somewhat to a cylinder 0.4" in diameter and 1" long. This approach would be preferable in situations where high accuracy is desirable and the larger probe size is acceptable.

The pulse rate of the transmitter was monitored by an observer with the aid of a stopwatch or by the pulse counting circuit described previously. The transmitter was tested on a free-roaming elk and on a hibernating black bear with good results in both cases (2,3).

Two Channel Body Temperature System

An improved body temperature telemetering system was designed which allows simultaneous measurement at two points with higher accuracy and resolution than the single channel system. The complete system consists of the transmitter, a receiver, a demodulator, and a chart recorder. Accurate recordings of body temperature at two different skin depths can be obtained over periods of up to 10 days with the system.

A block diagram of the system is shown in figure 32.

A circuit diagram of the transmitter is shown in figure 33. It uses the basic transmitter circuit with a modified keying arrangement. The transmitter is switched on and off at approximately 50% duty cycle by a temperature-dependent keying circuit which is controlled by the temperature of one of two thermistors. The thermistors are sampled alternately by the switching circuit formed by Q5, Q6, Q7, Q8, Q9, and Q10. When the thermistor temperature is at 37.0^{o}C, its resistance is equal to that of the precision resistor R6 and the duty cycle of the astable multivibrator formed by Q1 and Q2 is exactly 50%. As the thermistor temperature varies above or below 37°C, its resistance changes approximately 5% per degree and varies the duty cycle of the multivibrator above or below 50%. One thermistor is sampled for 15 seconds and the other for 25 seconds to allow identification of the two channels. The thermistors are mounted in a flexible polyethylene probe to permit subcutaneous body temperature measurements at depths of 4 cm and 7 cm.

A circuit diagram of the demodulator is shown in figure 34. The input signal from the receiver is a square wave with approximately 50% duty cycle. The signal is passed through an adjustable-level clipping circuit (Q2 and Q3) and shaping circuits (Q4, Q5, Q6, and Q7) to remove noise introduced by the transmitting and receiving process. The signal is then averaged by an operational amplifier integrator (A1). The output voltage of the integrator is proportional to temperature and is displayed on a chart recorder.

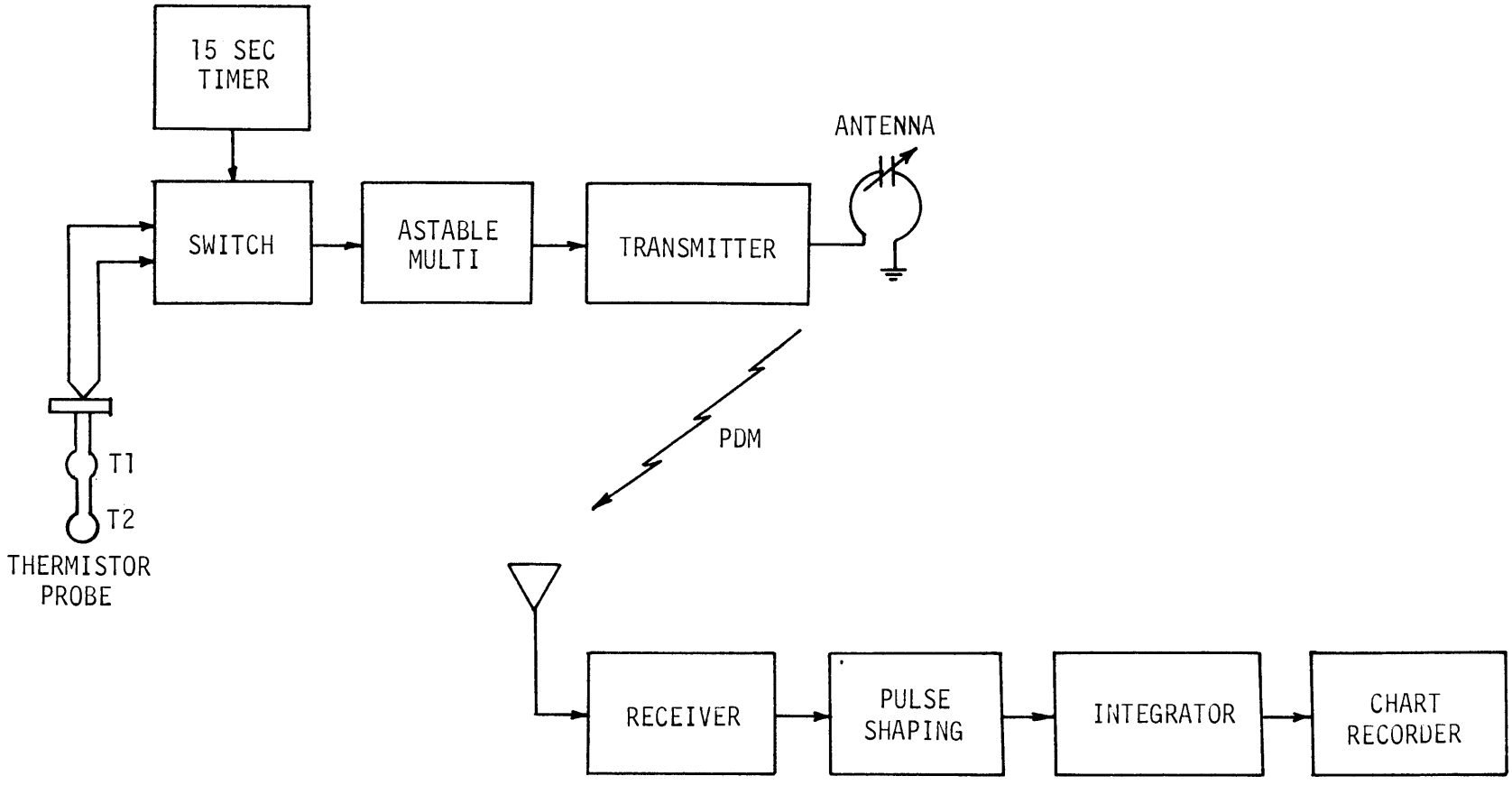

Figure 32: Two channel body temperature system

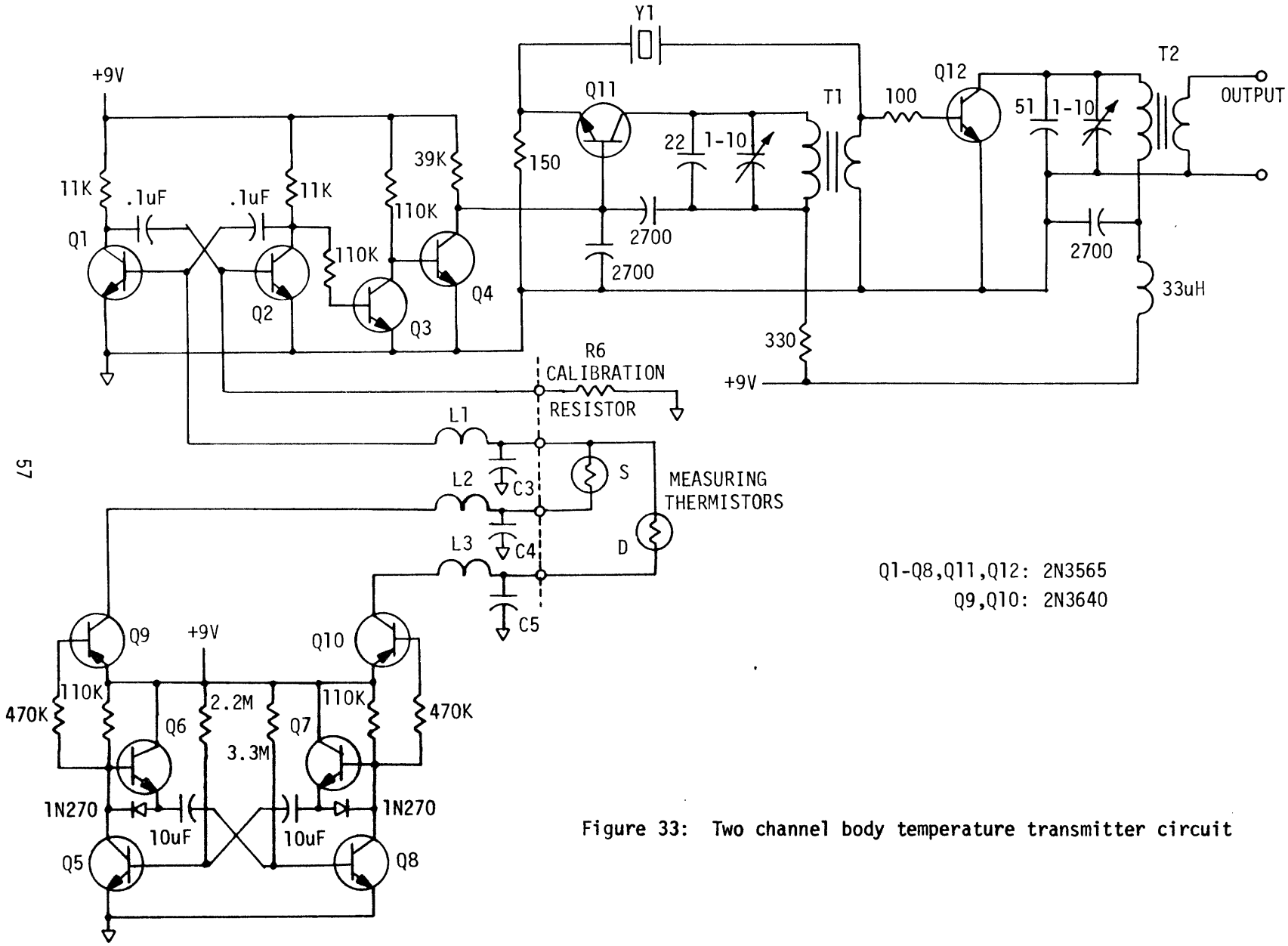

Q1-Q8,Q11,Q12: 2N3565
Q9,Q10: 2N3640

Figure 33: Two channel body temperature transmitter circuit

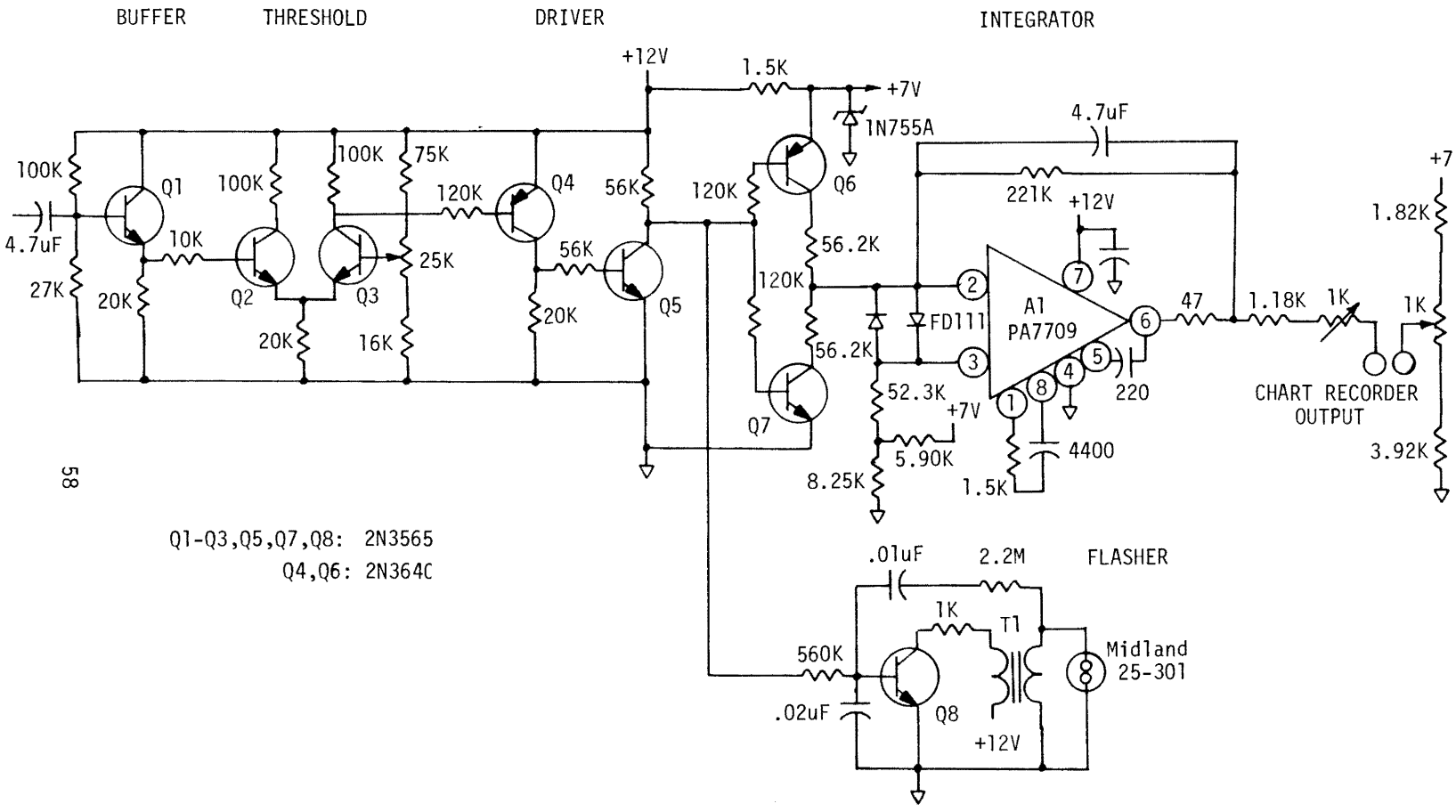

Figure 34: Demodulator circuit for two channel body temperature system

Field tests of the system were conducted by taping the probe to the skin of one of the researchers and recording temperature variations over a period of 15 hours (1). The temperature record obtained in this manner is shown in figure 35. Small differences in the temperature of the two sensing thermistors were present because of the probe attachment method, so two traces are evident in the recording.

ACTIVITY

A prototype motion-sensing transmitter was developed whose pulse rate is roughly proportional to the activity of the animal to which it is attached. When the transmitter is at rest, its pulse rate is 46 pulses per minute. When the transmitter is moved or shaken, additional pulses result from the motion transducer which increase the total pulse-per-minute count. A block diagram of the system is shown in figure 36.

A circuit diagram of the keyer circuit is shown in figure 37, along with a sketch of the motion transducer. The transducer is similar to one used by F. Knowlton (4). It consists of the ceramic element from a Sonotone 2TA-S phonograph cartridge mounted in a cylindrical cavity in a lucite block. Two 3/32" steel ball bearings strike the element when the transducer is moved and cause a small voltage spike which fires the monostable multivibrator circuit, causing a transmitter pulse.

Animal activity may be monitored by an observer making periodic pulse counts, or the signal may be recorded with a pulse counter or totalizer.

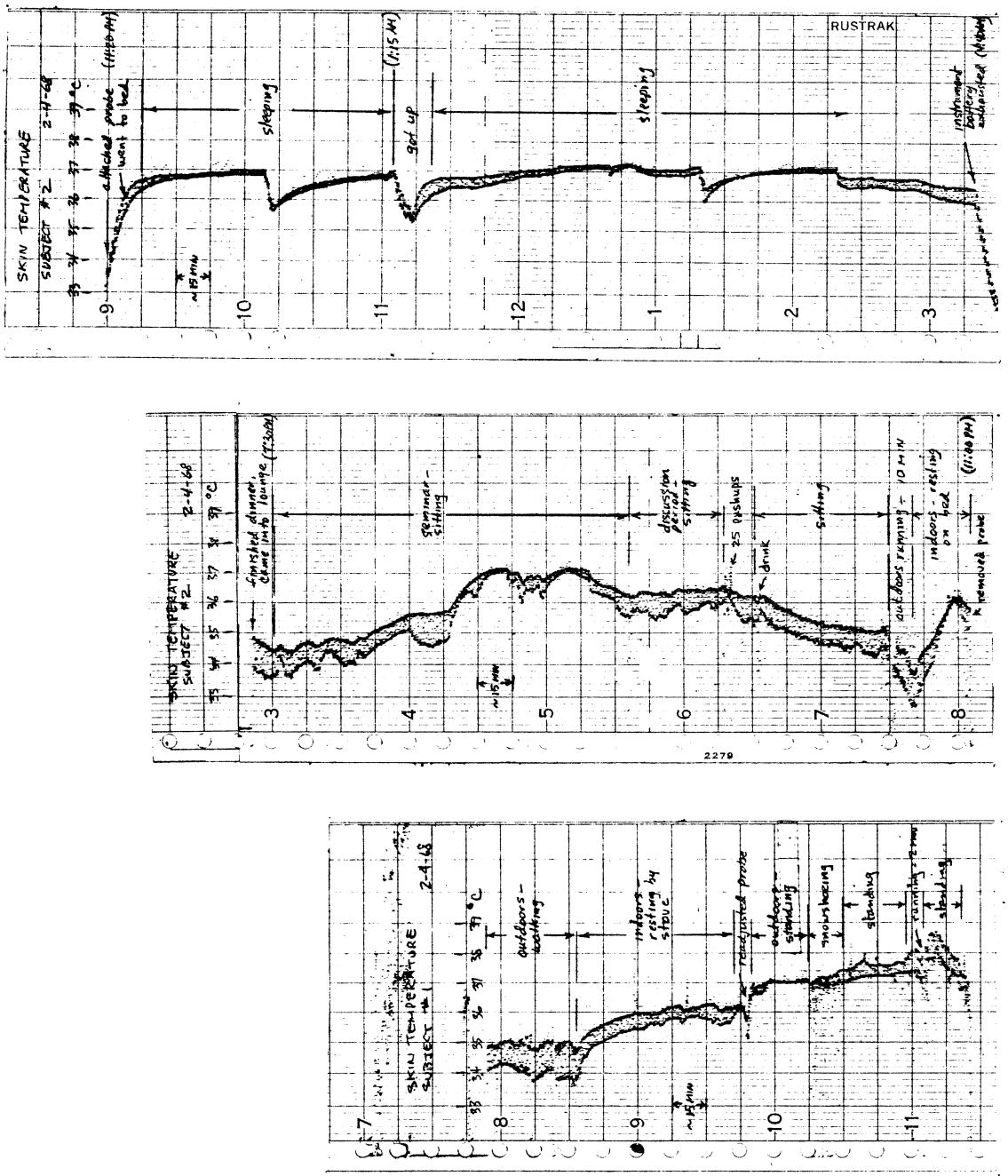

Figure 35: Skin Temperature Recordings

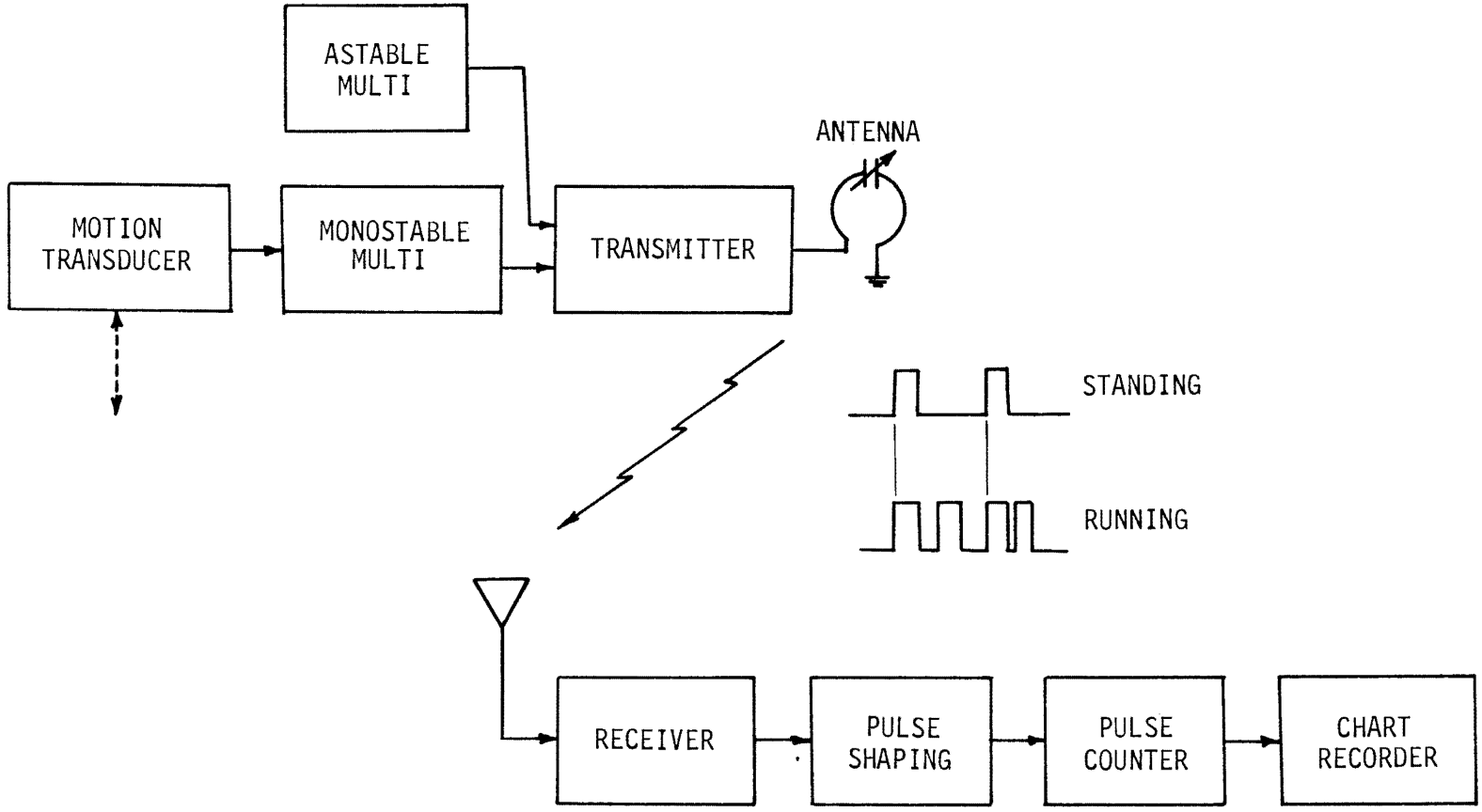

Figure 36: Activity monitoring system

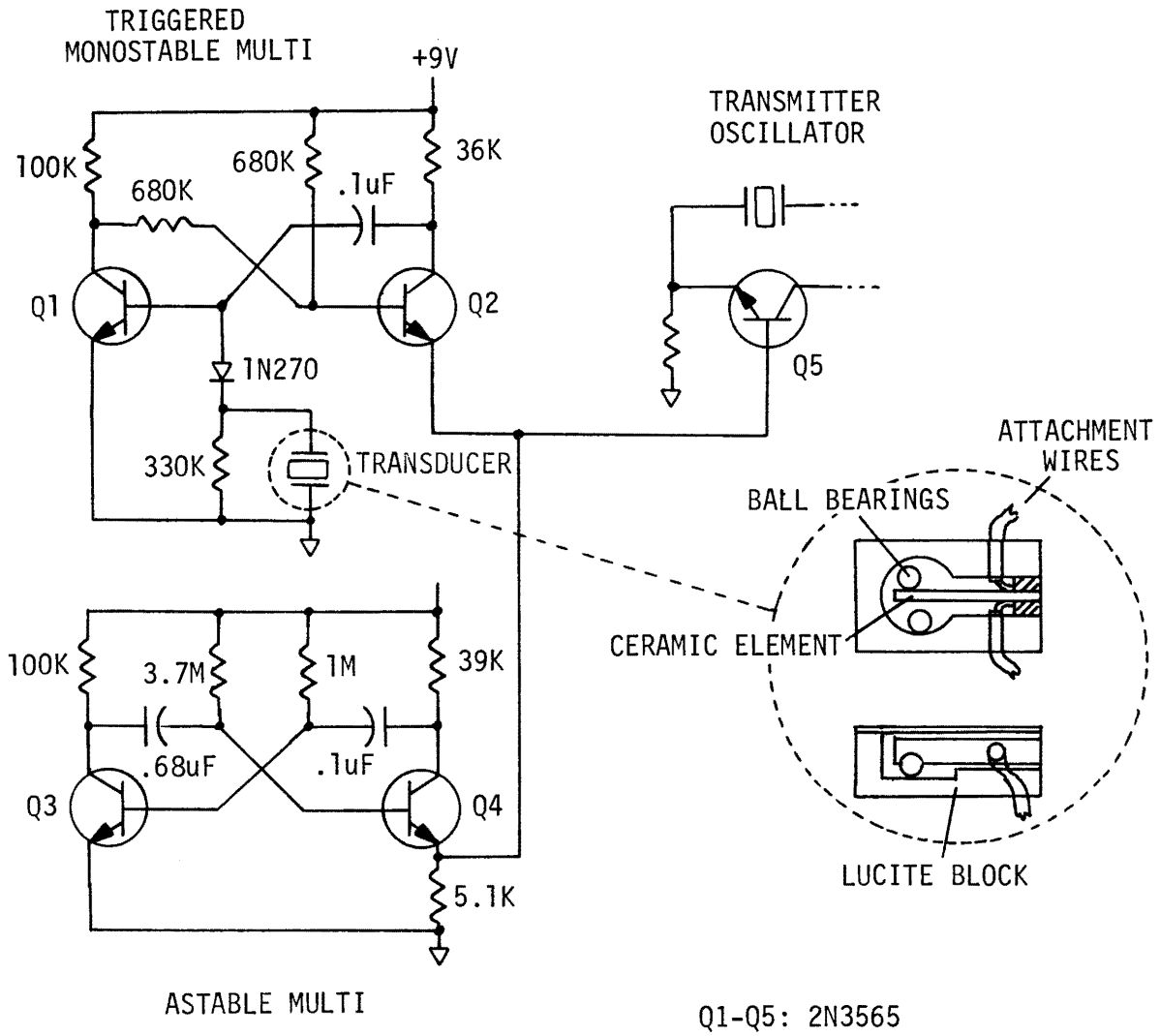

Figure 37: Motion sensor keyer circuit and transducer

The transmitter was tested on a free-roaming elk with satisfactory results. Improvements could be made, however, in the sensitivity of the transducer to small motions. This could be accomplished by minor changes in the transducer design or by using one of several commercially-available accelerometers.

HEART RATE

A prototype system for telemetering electrocardiogram waveforms was developed and tested. It consists of a collar transmitter with sensing electrodes, a receiver, a discriminator, and a portable battery-operated oscilloscope. Electrocardiogram potentials picked up by electrodes attached to the animal are transmitted to the receiving station and displayed on the oscilloscope. The baseband frequency response of the system of 5 Hz to 50 Hz, which is sufficient for medium-quality reproduction of the EKG waveform. A block diagram of the system is shown in figure 38.

System Operation

The EKG waveform picked up by two electrodes attached to the animal is amplified by a high gain differential amplifier and used to vary the frequency of a 200 Hz subcarrier multivibrator. The multivibrator output turns the transmitter on and off. The signal from the transmitter is picked up, amplified, and detected by the tracking receiver. The pulse train from the receiver is fed into the discriminator, where it is shaped

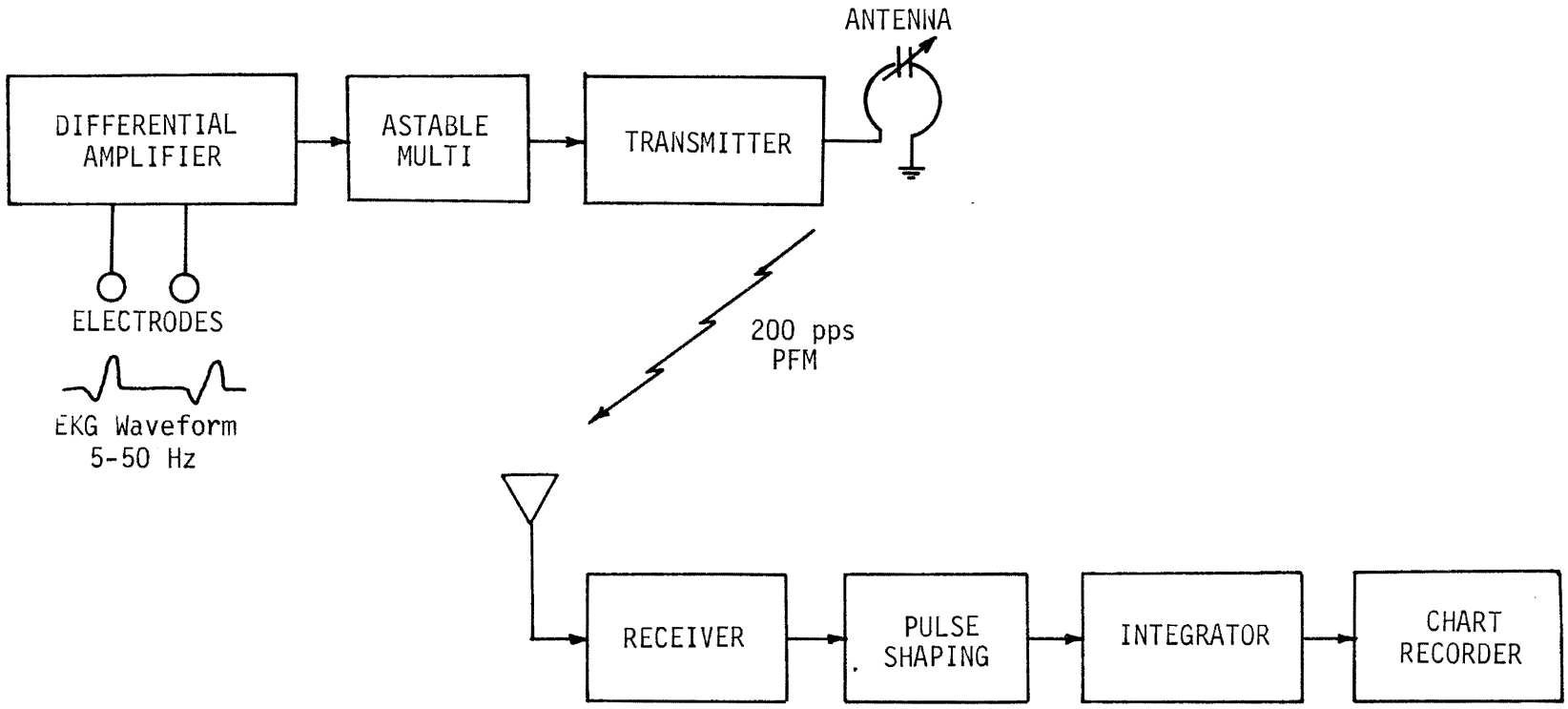

Figure 38: Heart rate monitoring system

by a Schmitt trigger circuit and used to trigger a monostable multivibrator. The resulting pulse train has constant width and amplitude, and is then filtered to recover the EKG waveform for display on the oscilloscope.

Transmitter Circuit

The transmitter consists of a low frequency differential amplifier followed by two single-ended amplifier stages which drive an astable multivibrator. The multivibrator in turn controls the transmitter. A circuit diagram of the low frequency portion of the transmitter is shown in figure 39. The remainder of the circuit is similar to the basic transmitter shown in figure 8.

Variations in current supplied to the timing capacitor C7 cause changes in the repetition frequency of the multivibrator and give a pulse-frequency modulated output waveform. The gain of the low frequency amplifier can be adjusted with R14 and the subcarrier frequency with R18. The multivibrator controls the bias current to the oscillator stage of the transmitter and keys the transmitter on and off at the subcarrier rate. The output of the transmitter is a series of 100 mW pulses of approximately 1 ms duration. Nominal deviation of the pulse repetition frequency from 200 Hz is ±20% with 0.4 mV input (at maximum gain setting).

High frequency bypassing is used on the electrode and battery leads to prevent the output signal from the transmitter from being picked up and rectified in the base-emitter junctions of the differential amplifier stages and causing shifts in the DC levels of the EKG waveforms.

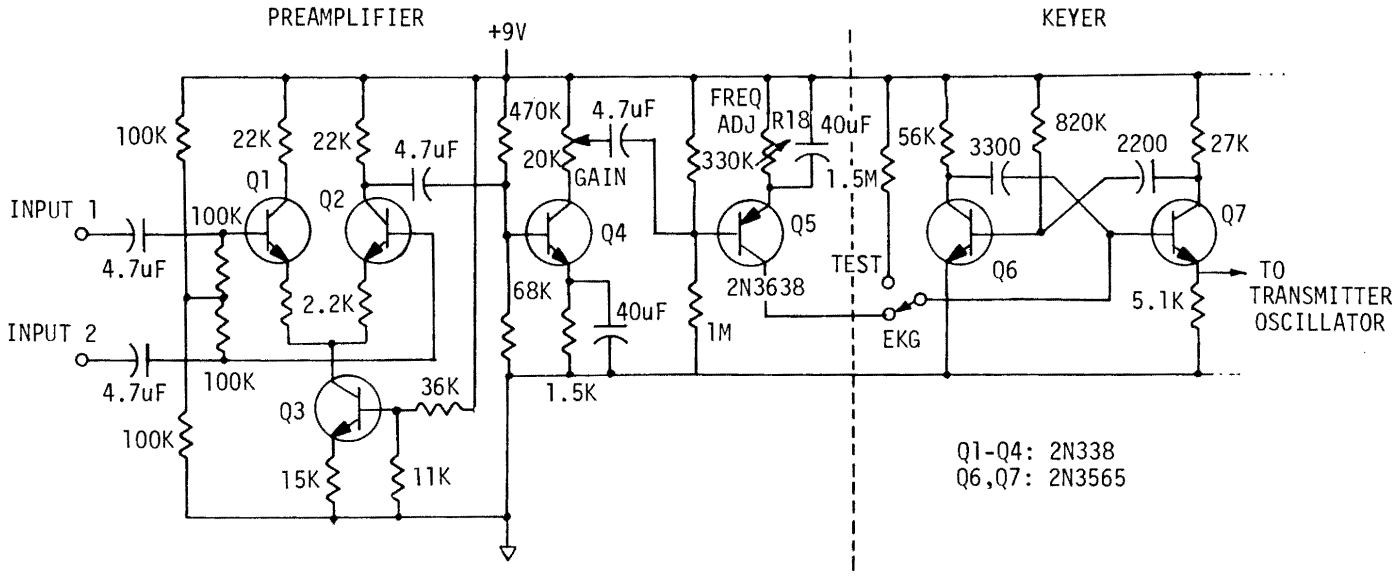

Figure 39: Low frequency portion of EKG transmitter

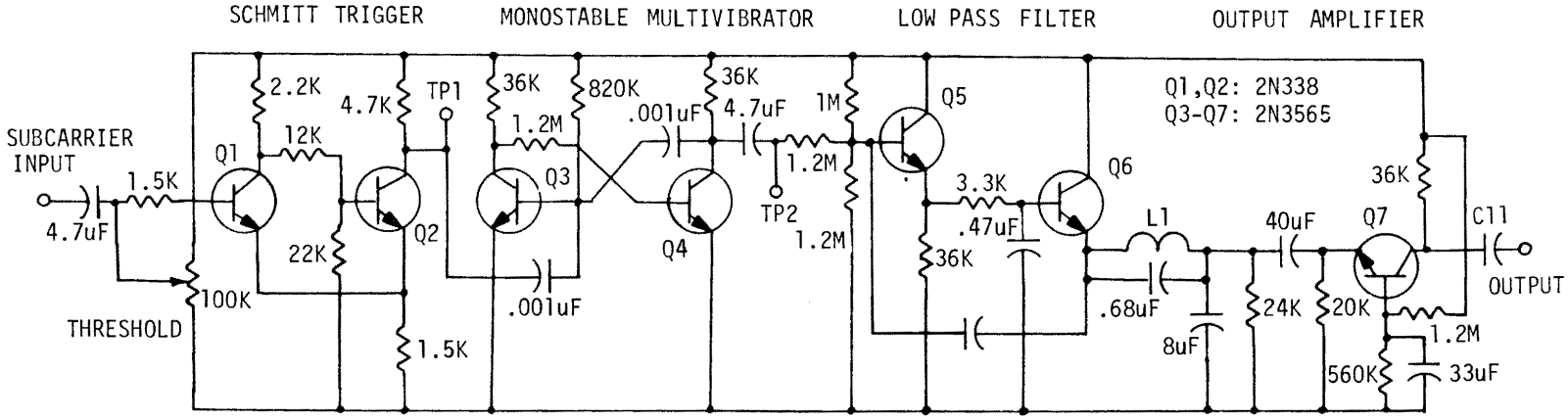

Figure 40: EKG discriminator circuit

The electrodes are connected to each of the balanced input terminals of the differential amplifier. A ground electrode is connected to the case of the transmitter and improves the rejection of 60 Hz hum when properly positioned on the subject. Use of the third electrode is not necessary except when operating near power lines.

Separate batteries were used for the low frequency amplifier and transmitter to improve isolation and stability.

Discriminator Circuit

The discriminator consists of a Schmitt trigger circuit, a monostable multivibrator, a low pass filter, and a buffer amplifier. A circuit diagram is shown in figure 40.

The pulse train from the receiver is applied to the Schmitt trigger formed by Q1 and Q2. A threshold adjustment is provided by R1 to raise the triggering level of the circuit above the random noise level of the receiver output. The Schmitt trigger output is an amplitude-limited pulse of the same width as the input pulse. The trailing edge of this pulse triggers the monostable multivibrator (Q3 and Q4) which provides a constant width, constant amplitude output pulse.

The pulse train is applied to the low pass active filter formed by Q5 and Q6 to remove the 200 Hz subcarrier, leaving only the desired EKG waveform at the input of the buffer amplifier Q7. The output voltage of the discriminator is 4 volts peak-to-peak with full deviation of the subcarrier.

System Performance

Field tests of the system showed its operation to be satisfactory in most respects. Oscilloscope waveforms obtained with a human subject before and after transmission through the system are shown in figures 41 and 43.

The EKG waveform at the transmitter input is shown in figure 41. The same waveform after transmission through the system is shown in figure 43. A small amount of overshoot on the trailing edge of the spike is evident and is due to the limited high-frequency response of the system. The effect of high frequency rolloff is illustrated by figure 42 and shows the distortion caused in the waveform of figure 41 by passing it through an 8 Hz to 50 Hz bandpass filter. The performance of the system is satisfactory for investigations of heart rate, which was all that was desired.

Several shortcomings of the system became apparent during testing. One problem was rather limited range (on the order of a mile or less with the loop antenna on the receiver). This is because a much stronger received signal is necessary for proper pulse discrimination than for simple tracking or direction-finding by ear. A second problem is the proper placement and attachment of electrodes. Testing was done with simple 1" square metal plates for electrodes, which would obviously not be suitable for use on an animal. It will probably be necessary to use a safety-pin type or implanted electrode of some kind to keep it in place on the animal for any

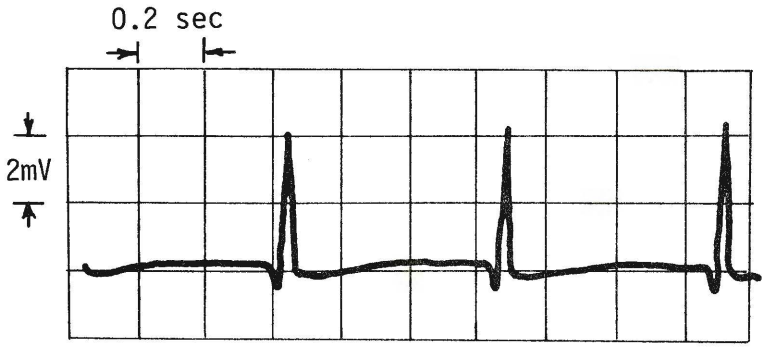

Figure 41: EKG waveform at transmitter input

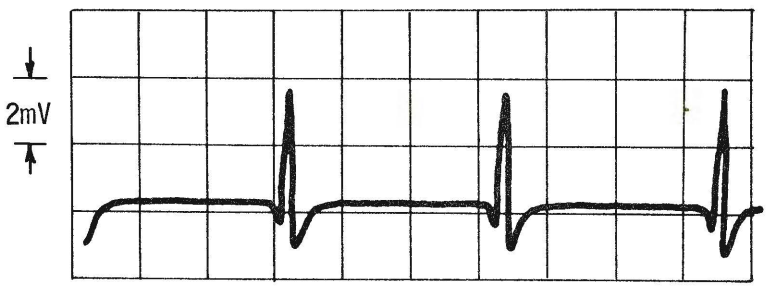

Figure 42: Effect of filtering by 8 - 50 Hz bandpass filter

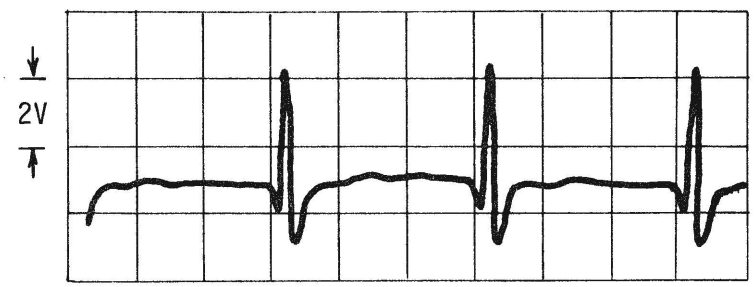

Figure 43: Waveform after transmission through system

reasonable length of time. The wire harness from electrodes to transmitter also poses a problem with a free-roaming animal and is likely to become snagged or broken within a few days.

A system of this sort would be suitable for use for some applications where the modest range and probable short electrode life are not serious handicaps. For longer monitoring periods, however, an alternate system such as an implanted transmitter with a repeater collar would probably be more satisfactory.

3. MISCELLANEOUS EQUIPMENT

Several items of equipment were developed for use with the basic radiolocation and telemetry systems described in the previous sections. These included an antenna lobe switching system for improved angle resolution, a repeater station, a recorder multiplexer unit, receiver power and frequency switch circuitry, and two location beacon transmitters. These items are described below.

ANTENNA LOBE SWITCHING SYSTEM

One of the disadvantages of the high gain yagi antennas is their relatively wide beamwidth (60° for a 3 element yagi and 45° for a 5 element yagi) which makes it difficult to obtain accurate directional bearings. A lobe switching system using two yagi antennas was designed and field tested in an effort to obtain more accurate bearings on weak signals.

The lobe switching technique was used in early radar systems. Two antennas are mounted side by side and oriented so that their patterns overlap as shown below:

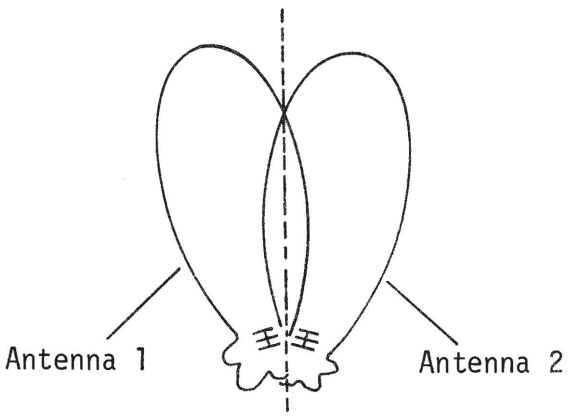

The dotted centerline is called the boresight axis, following radar terminology. The receiver is electronically switched from one antenna to the other; when the transmitter being tracked lies on the boresight axis, the signals from the two antennas are equal. As the antenna array is rotated, the signal from one of the antennas becomes weaker while the other becomes stronger. These signals are compared by passing the receiver output through a bandpass filter centered at the switching frequency; the result is an audio tone that nulls when the two signals are equal and increases when the are unequal.

Circuit Description

The signal-processing circuitry consists of a multivibrator-driven RF switch and a 1 KHz narrowband audio amplifier. Circuit diagrams are

shown in figures 44 and 45.

The multivibrator switches the RF output terminal between the two antenna terminals at a 1 KHz rate. The circuit is electrically equivalent to a single-pole double-throw switch. The multivibrator provides bias current for the switching diodes, which appear as a low resistance signal path when forward biased and as an open circuit when reverse biased.

The receiver audio output is passed through through the 1 KHz narrowband amplifier to a set of earphones. When the received signals from each antenna are equal, the 1 KHz tone will be very weak; its volume increases as the received signals become unbalanced. The filtering action of the amplifier is necessary to remove the 2 KHz second harmonic frequency generated by the switching process which would otherwise obscure the 1 KHz null.

Antenna Mounting

Two 3 element yagi antennas were mounted at the ends of a 20 foot horizontal wood beam as shown in figure 46. The vertical support rods for each antenna were connected by a copper strap to provide a common ground. The lead-in cables to each antenna were made equal in length to minimize stray pickup effects. The spacing between the antennas is approximately 0.7 wavelength, and each antenna was oriented so that it was 15° away from the boresight axis.

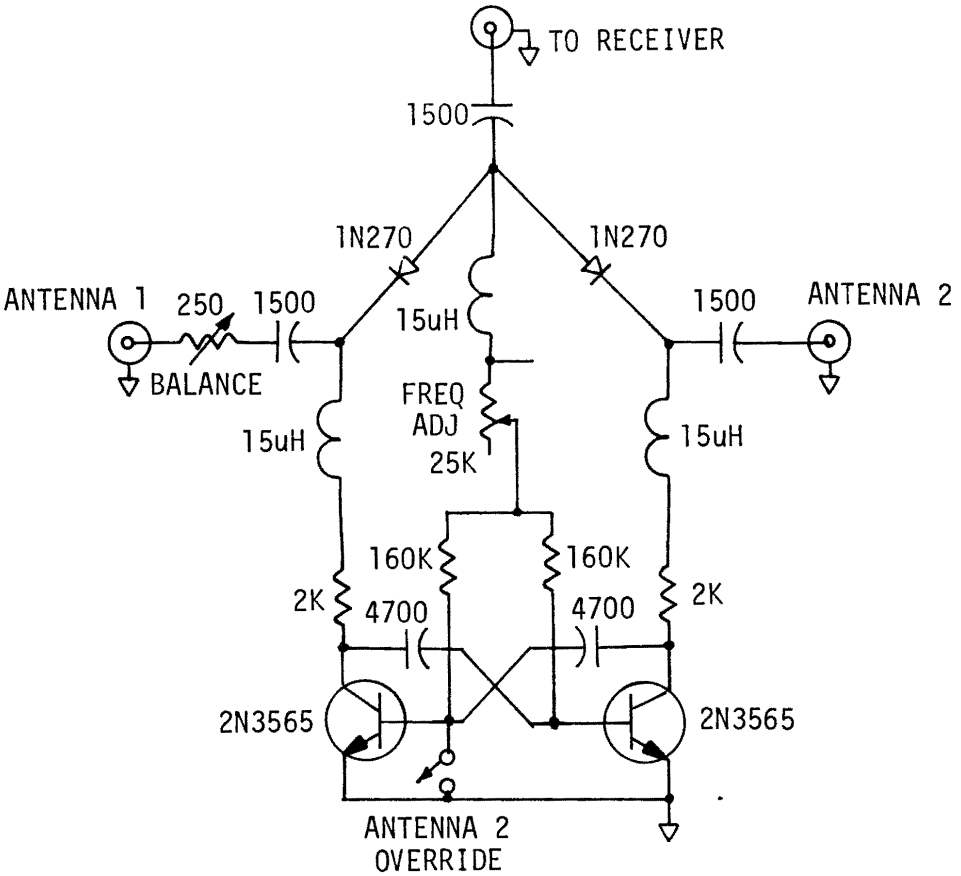

Figure 44: Antenna switch and driver circuit

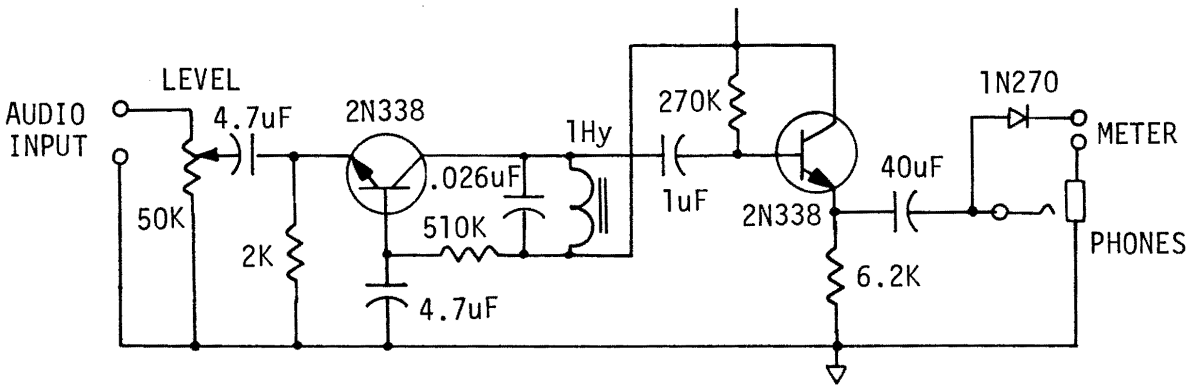

Figure 45: Narrowband audio amplifier circuit

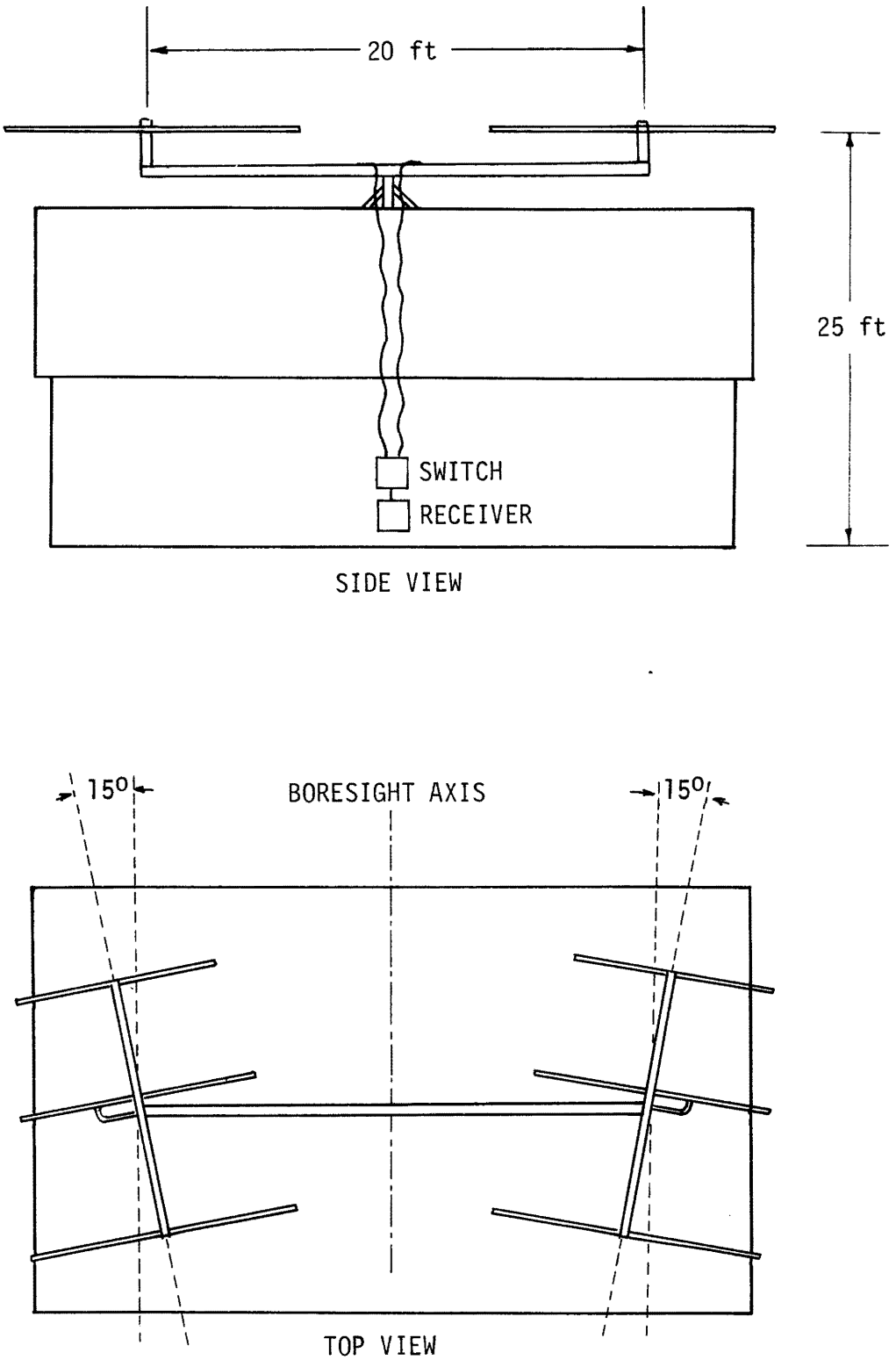

Figure 46: Antenna array used for tests of lobe switching system

Performance

Individual pattern tests were made on each antenna and showed some distortion of the beam due to interaction effects. This was expected because of the broad pattern of each antenna and the relatively close spacing between them. The system performed successfully, however. The null on the boresight axis was quite pronounced and bearing could be easily taken to within 5°.

The disadvantages of the system are mainly structural. The yagi antennas are large and heavy (15 feet square, 20 pounds), and the array is cumbersome to rotate. Such an arrangement is suitable for use only at a fixed location such as the base station. This technique would be much more practical at higher frequencies where the size of the antennas would be reduced, resulting in a smaller and more manageable array.

REPEATER

A repeater unit was developed for use in inaccessible locations. It receives a weak signal from an instrumented animal and rebroadcasts a strong signal. The repeater can be used to determine the presence or absence of an animal within a certain radius around the station, or for extending the range at which a signal from an instrumented animal can be received.

System Operation

The repeater consists of a receiver, transmitter, and various control circuits. A block diagram of the unit is shown below:

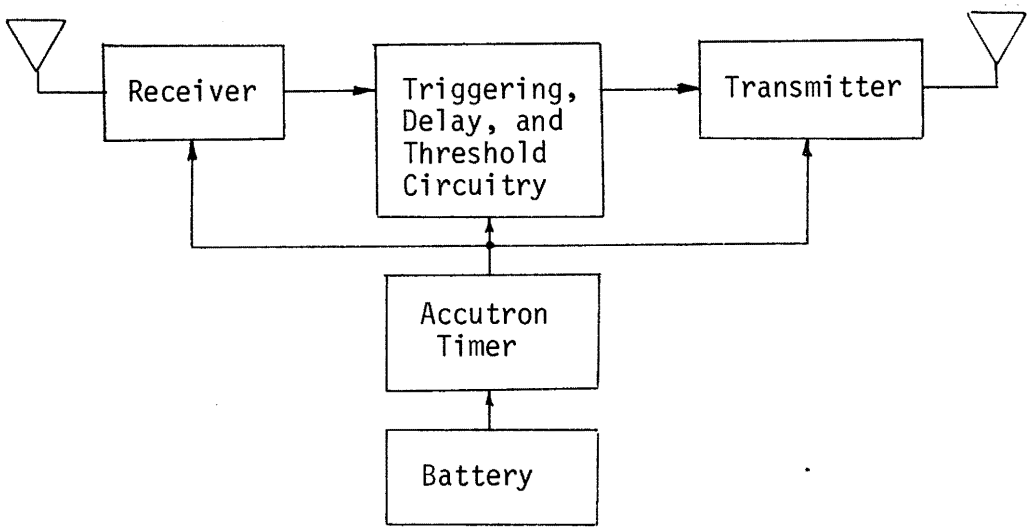

In operation, an incoming signal pulse is picked up by the receiver; this pulse is detected, turns off the receiver momentarily, and causes the transmitter to turn on and transmit a 175 mW pulse on the same frequency. At the end of the transmitter pulse, the receiver turns back on and is ready for the next incoming pulse. The strength of incoming pulses required to trigger the repeater is set by a threshold control. This allows selection of the range at which the repeater will be triggered by an instrumented animal.

An Accutron timer turns the repeater on for 3 minutes at 30 minute intervals if continuous operation is not desired. Battery life is increased by a factor of 10 when the repeater is operated in this mode.

Circuit Description

The receiver portion of the repeater consists of a modified Cadre C-75 receiver board similar to those used in the portable receivers described earlier. Modifications included component replacement and retuning for operation at 32 MHz, and reducing the time constant of the AGC circuit for best operation with the 50 ms pulse width of the tracking transmitters.

The transmitter portion of the repeater is similar to a standard tracking transmitter with minor changes to obtain higher output power.

The contol circuits consist of an integrator, threshold control, delay circuit, receiver timing circuit, and transmitter timing circuit. These are shown in figure 47.

The output from the receiver is connected to the integrator circuit Q1. This stage acts as a buffer amplifier between the receiver and the threshold stage, and has a relatively long time constant to prevent triggering on received noise and static. The integrator is followed by the threshold circuit formed by Q2 and Q3. It is an emitter-coupled differential amplifier which provides an input to the following stage when the voltage at the base of Q2 exceeds the reference voltage at the base of Q3. The reference voltage is adjusted with a potentiometer to vary the threshold level.

The delay circuit is a monostable multivibrator formed by Q4 and Q5. When an input pulse is received from the threshold stage, Q5 is turned on, which in turn triggers the receiver timing circuit formed by Q6, Q7,

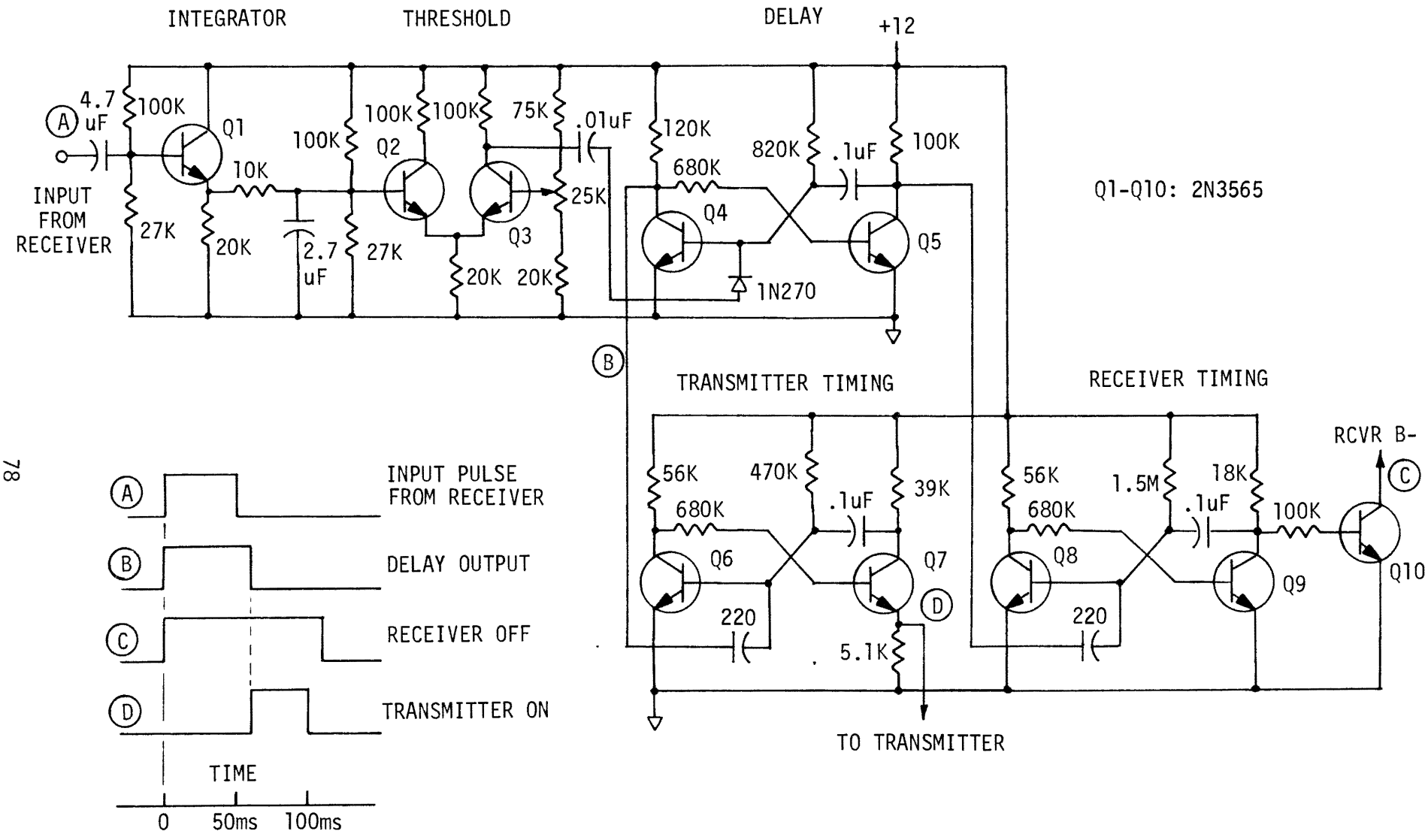

Figure 47: Repeater control circuitry and timing waveforms

and Q8. The receiver timing circuit then turns off the receiver for 100 ms. While the receiver is off, Q4 in the delay circuit turns back on and triggers the transmitter timing circuit formed by Q9 and Q10. This causes the transmitter to turn on for 30 ms then turn off before the receiver comes back on.

The timing waveforms are also shown in figure 47. It is necessary to turn the receiver off before actuating the transmitter to permit operation on the same frequency without self-blocking.

Performance

Preliminary field testing showed that the repeater operated successfully. It has not been used extensively enough as yet to make a thorough evaluation, but some advantages and drawbacks were immediately evident.

Unless highly directional antennas are used for both receiving and transmitting, some interactions occur between antennas which affect their patterns. This interaction, coupled with propagation variations caused by terrain, makes it difficult to obtain omnidirectional coverage around the repeater location. If the repeater is being used to determine if an instrumented animal is in the general vicinity, there will be some locations from which a signal will not be received.

It is also difficult to determine the correct setting for the threshold control for a desired radius of coverage due to the antenna pattern and propagation variations.

The repeater should be quite useful for relaying signals from variable pulse rate transmitters (ambient temperature, body temperature, activity) in distant locations to a receiving station. The repeater can be set up at an intermediate point with two directional antennas, thus avoiding the interaction problems encountered with omnidirectional antennas.

RECORDER MULTIPLEXER

A recorder multiplexing device was designed to allow monitoring of several telemetry channels with a single recorder. The multiplexer is basically a stepping switch which sequentially connects the recorder to the output of several receiver signal-processing circuits (for example, the body temperature demodulator, figure 34, or the pulse rate converter, figure 28).

Circuit Description

The multiplexer consists of two stepping relays, a timing circuit, and indicator lamps to show which channel is connected to the recorder. A circuit diagram of the unit is shown in figure 48.

A unijunction transistor timing circuit Q1 provides a pulse at two minute intervals which triggers the monostable multivibrator circuit formed by Q2 and Q3. The pulse generated by the multivibrator turns on the relay drive circuit (Q4 and Q5) and advances the stepping relay K1 by one position. The same pulse also fires the multivibrator circuit formed by Q6 and Q7, which in turn advances the stepping relay K2 by one position.

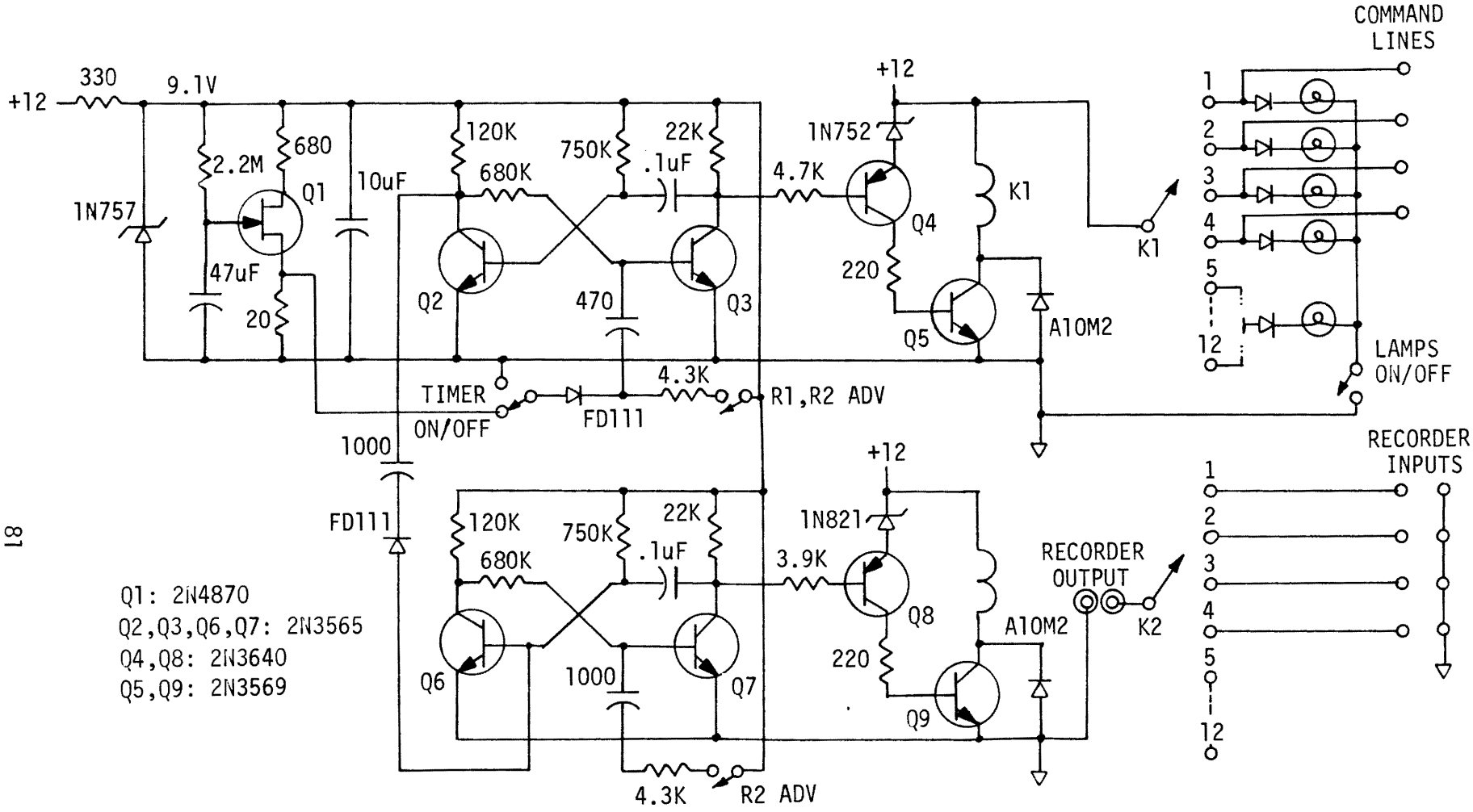

Figure 48: Recorder multiplexer circuitry

Relay K1 provides a 12 volt output which turns on a channel identification lamp and can also be used for DC power for additional signal processing circuits connected to that channel. Relay K2 connects the chart recorder terminal to the various input channel terminals.

Performance

The operation of the unit was satisfactory except for one problem. Under some conditions (low battery voltage or extremely low temperatures) one of the stepping relays will occasionally not advance when pulsed while the other does. The result is that the channel being sampled will not have the DC power applied to it at the proper time. Use of a single double-deck stepping switch would eliminate this problem and simplify the drive circuitry slightly.

RECEIVER FREQUENCY AND POWER SWITCHING

Electronic switching of the receiver frequency channel and DC power was developed to allow automatic recording of telemetry information which is being simultaneously transmitted on two different frequencies, an to allow the receiver to be remotely switched on and off to extend battery life. This enables the multiplexer described above to select the proper channel by applying a command signal to the receiver and to switch it off when neither channel is being monitored.

The channel switching circuitry is shown in figure 49. The receiver

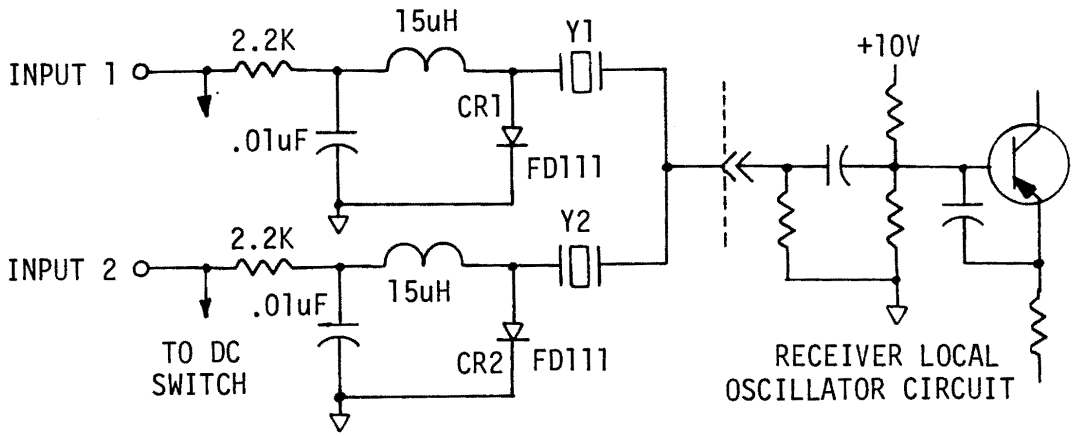

Figure 49: Receiver channel switching circuit

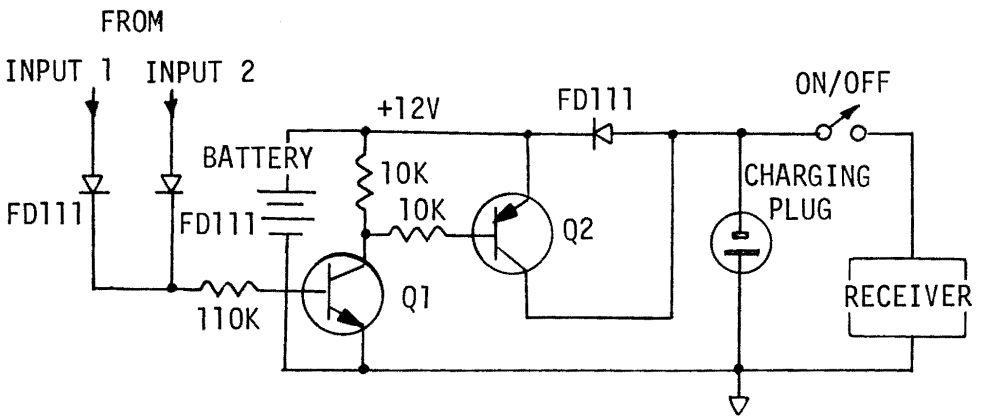

Figure 50: Receiver power control circuit

local oscillator crystals for the two channels being used are connected in parallel to the oscillator transistor base. When the 12 volt command voltage is applied to terminal 1, diode CR1 is forward biased and provides a low impedance path to ground while CR2 is nonconducting and appears as an open circuit. The oscillator frequency under these conditions will be determined by crystal Y1. When the command voltage is applied to terminal 2, the reverse will be true and the oscillator frequency will be determined by Y2. Several more channels could be accommodated with this technique by adding additional crystal and command lines.

The power control circuitry is shown in figure 50. It allows the DC power to be turned on and off by the same command signal which selects the frequency channel, and consists of a simple transistor switch in series with the manual power switch. The receiver will be turned off except when being sampled by the multiplexer unit.

RESCUE BEACON TRANSMITTERS

Two prototype rescue beacon transmitters were designed and constructed. Field tests were made to evaluate their usefulness for short range location of animals or persons under emergency conditions. One possible application for such transmitters is locating skiers buried in an avalanche.

Different frequencies were used for the two units (1 MHz and 32 MHz) so that the relative advantages of each could be compared. Both transmitters are 100% amplitude modulated with a tone which sweeps from 300 Hz to 1 kHz

twice per second. This modulation is similar to that used by the FAA and the military services on emergency location beacons.

1 MHz Transmitter

A circuit diagram of the 1 MHz transmitter is shown in figure 51. Q1 and Q2 form a ramp generator with a frequency of 2 Hz. This ramp voltage is applied through an isolation amplifier Q3 to the timing resistors of the astable multivibrator formed by Q4 and Q5. The varying voltage sweeps the frequency of the multivibrator between 300 Hz and 1 kHz. The frequency-swept voltage at the collector of Q5 turns Q6 on and off and thus controls the supply voltage of the 1 MHz oscillator stage Q7. The output of Q7 is an amplitude modulated 1 MHz signal which is fed to the power amplifier Q9. The output of Q9 is connected to a ferrite-core loop antenna.

The transmitter circuitry is mounted in a 2 x 2x 3 inch aluminum chassis box. The ferrite antenna is mounted on the outside of the box and covered with silicone rubber for protection from moisture and abrasion.

A standard broadcast band transistor radio is used to recive the signal from the transmitter. The maximum measured range was apporximately 40 feet. The directional properties of both the transmitter and receiver antennas make it impractical to determine the direction of the transmitter by rotating the receiver. However, the strength of the signal changes quite rapidly with distance because the system is operating in the near field region of the transmitter antenna, so that location of the transmitter

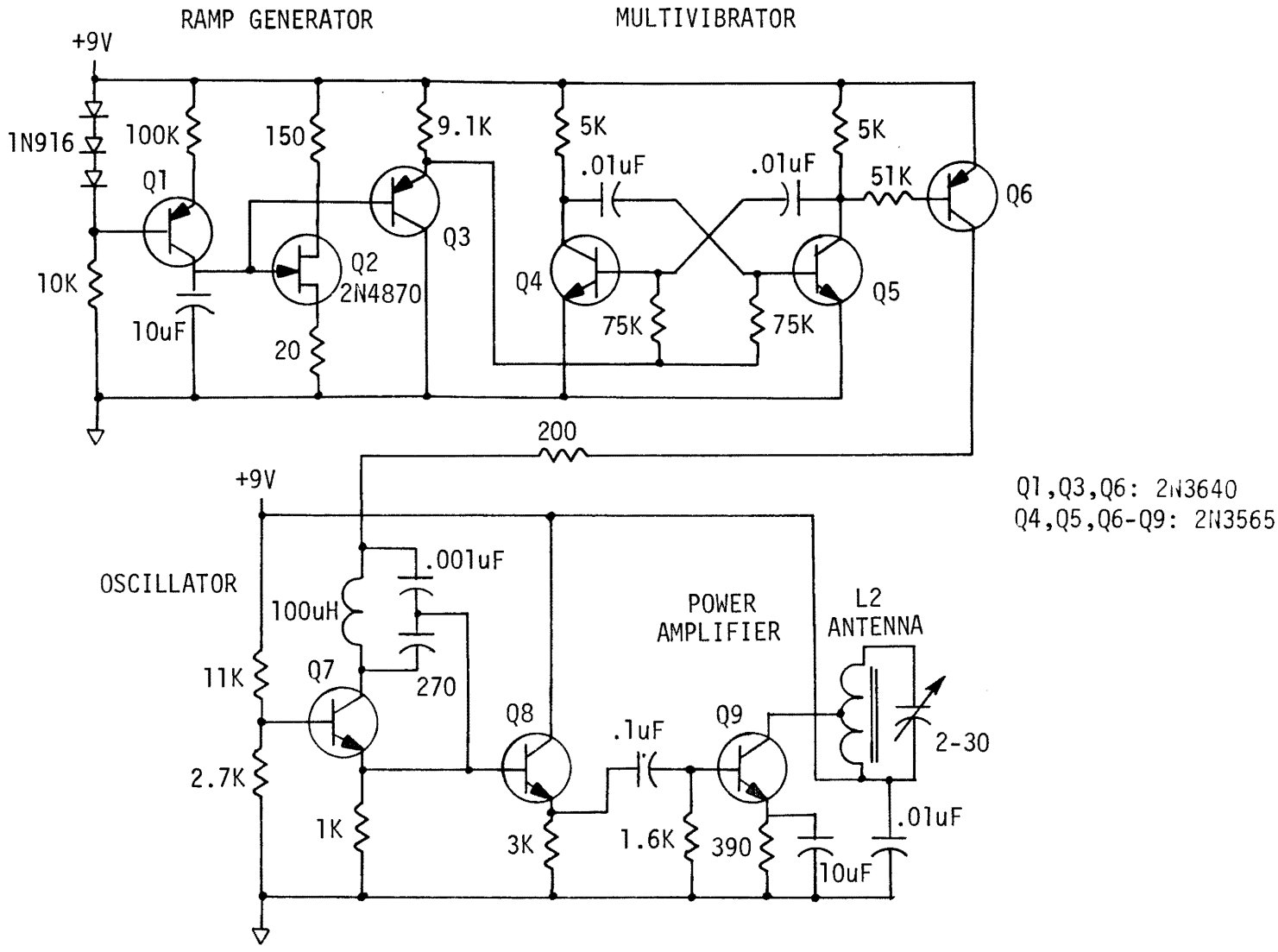

Figure 51: 1 MHz rescue beacon transmitter circuit

by loudness of the received signal is quite practical.

In field tests, the transmitter was buried in 5 feet of snow in an area about 40 by 70 feet in size. Various subjects attempted to locate the transmitter without knowing where it was buried. They could usually locate it within 2 feet in less than 2 minutes, which would be very satisfactory for avalanche rescue work.

32 MHz Transmitter

The circuit diagram of the 32 MHz beacon transmitter is shown in figure 51. The ramp generator and multivibrator circuits are identical to those described above for the 1 MHz transmitter. Q6 controls the supply voltage of the power amplifier stage Q8, while the oscillator stage Q7 is allowed to run continuously. The output of Q8 is a nearly 100% amplitude modulated 32 MHz signal. The average output power is 50 mW.

The transmitter circuitry is mounted in a chassis box similar to that used for the 1 MHz transmitter. The output stage is connected to a pair of terminals to allow connection of different types of antennas during field testing.

A non-resonant 3 inch diameter loop antenna was used for field tests. Using the portable tracking receiver described earlier with the 11-inch diameter loop antenna, the transmitter signal could be picked up at a maximum range of 230 yards. The signal radiated by the transmitter was nearly omnidirectional and the receiver loop antenna gave accurate

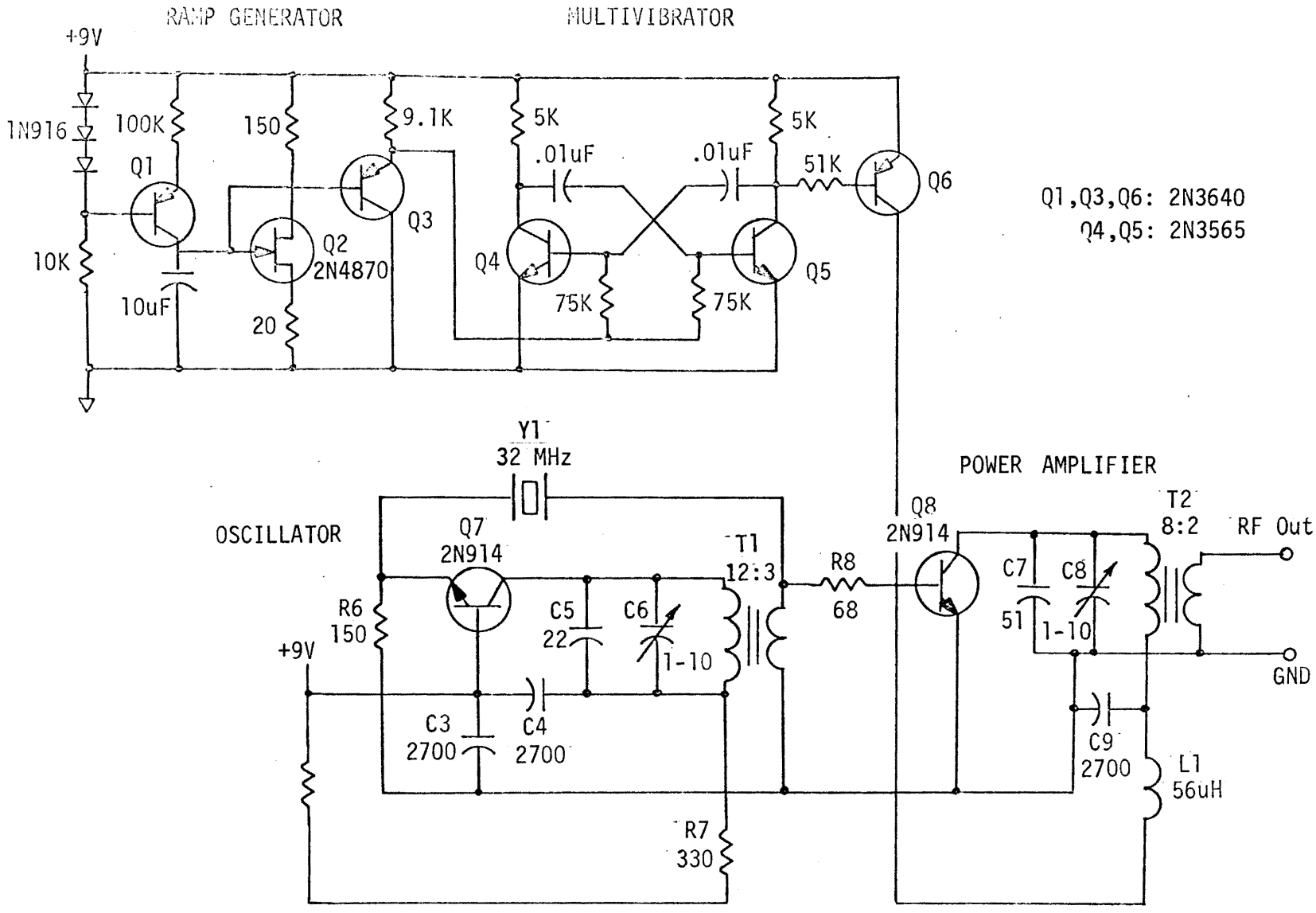

Figure 52: 32 MHz rescue beacon transmitter circuit

bearings as long as the separation between transmitter and receiver was more than 10 feet.

The use of larger or more efficient antennas for the transmitter would result in ranges approaching those obtained with the standard location system.

REFERENCES

1. Craighead, F.C.Jr., J.J. Craighead, J. Varney, in Yellowstone Field Research Expedition 8, Atmospheric Sciences Research Center Publication 68, State University of New York at Albany, pp. 57 -63. May 1, 1968.

2. Craighead, F.C. Jr., J.J. Craighead, J. Varney, in Yellowstone Field Research Expedition 6, Atmospheric Sciences Research Center publication 37, State University of New York at Albany, pp. 50 - 53. May 1, 1966.

3. Craighead, F.C. Jr., J.J. Craighead, in Yellowstone Field Research Expedition 7, Atmospheric Sciences Research Center Publication 45, State University of New York at Albany, pp. 61 - 71. May 1, 1967.

4. Knowlton, F.F., P.E. Martin, J.C. Haug, "A Telemetric Monitor for Determining Animal Activity", J. Wildlife Management, 32(4): 943-948. October 1968.

Satellite Tracking of Elk

For the first time an animal has been tracked
on the earth from a satellite

Frank C. Craighead, Jr., John J. Craighead,
Charles E. Cote, and Helmut K. Buechner

The authors are, in order: Adjunct Professor of Biology, Department of Biology, State University of New York at Albany, New York, and President, Environmental Research Institute, Moose, Wyoming; Leader, Montana Cooperative Wildlife Research Unit, U.S. Bureau of Sport Fisheries and Wildlife, University of Montana, Missoula, Montana; Space Technologist, Goddard Space Flight Center, Greenbelt, Maryland; and Senior Ecologist, Ecology Program, Office of Environmental Sciences, Smithsonian Institution, Washington, D.C.

12 March 1971

In a feasibility study to test the practicability of using the Interrogation Recording Location System (IRLS) (Cressey and Hogan, 1965; Cote, 1969, 1970) for tracking free-roaming animals, a female elk was fitted with a collar containing both an IRLS transponder and a Craighead-Varney ground-tracking transmitter (Craighead and Craighead, 1963, 1965a). The elk was tracked by the satellite and data were received during the entire month of April 1970. This was the first time an animal on the surface of the earth had been tracked by satellite. The feasibility of modifying IRLS equipment for this purpose was demonstrated. It is concluded that satellite data collection systems can have important applications for tracking animals in remote areas.

IRLS System

IRLS is an experimental system aboard the Nimbus 3 and 4 meteorological satellites to test the feasibility of locating and collecting data from remote instrumented platforms deployed on the surface of the earth. The IRLS system consists of the satellite, instrument platforms, and a central ground acquisition and command station (located in Fairbanks, Alaska). Each platform is equipped with a transmitter, receiver, and data encoder which are activated upon receiving a discrete 16-bit address code from the satellite. In operation the addresses of electronic platforms and anticipated times of platform overpass are programmed into the satellite on an orbit-by-orbit basis from the command station. As time elapses into the orbit, interrogations of platforms are executed at the preprogrammed times. During each interrogation the short-range distance from the satellite to the platform is measured by the satellite;

simultaneously, the platform transmits encoded sensor data to the satellite. The range information, time of ranging, and sensor data are stored in the satellite for readout at the end of the orbit (107 minutes later). A minimum of two interrogations is required per platform to determine its position. Through computer modeling, the locus of each range measurement forms a circular sphere in space with the satellite situated at its center. Each ranging sphere in turn intersects the surface of the earth (a third sphere) to project intersecting circles (Fig. 1). The platform must necessarily be located at one of the two intersections; the ambiguity is resolved through prior knowledge of the platform's position. The accuracy of locations increases with increasing distance between the satellite's orbital plane (ground track) and the platform. Data from passes nearly overhead translated into large errors in location in the geometrical calculations for position. The Nimbus III satellite was launched into a polar sun-synchronous orbit with equator crossings at local high noon and midnight, around the globe.

Instrument Collar

In cross-sectional view (Fig. 2) the IRLS collar is triangular in shape for conformance to the animal's neck. The interior sides were lined with foam rubber for protection against abrasions.

The prime power source for the instrument was provided by nickel-cadmium batteries contained in the left compartment of the collar. To insure a minimum lifetime of 6 months operation, an electromechanical timer was utilized to eliminate battery standby power during the 12-hour intervals between orbital overpasses. Solar cells were mounted to the

sides of the collar to provide continuous charging during daylight hours. The IRLS electronic equipment utilized for this application was initially designed for operation on high altitude balloons; and only through the coordinated efforts of engineers and biologists in government, private institutions, and industry was the successful completion of the design possible. The detailed performance and physical specifications of the collar are listed in Table 1.

The Craighead-Varney ground-tracking transmitter (32 MHz) was installed in the lower compartment of the collar. A separate set of batteries and the antenna for this system were located at the top of the collar. Installation of the collar on the elk was accomplished by separating the instrument into two parts. It took 10 minutes to make the electronic connections and fasten the two parts of the collar on the animal.

Sensors

The design specifications of the IRLS system permit multiple sensory functions to be monitored by the platform (collar) for transmission and storage aboard the satellite. In normal operation, data are available to experimenters or users within 1 to 2 hours of the overpass. Data formats of various lengths are available to meet specific requirements. The standard format consists of 22 data words encoded to $\pm 1\%$ accuracy (7 bits). Up to 30 such frames may be collected with each interrogation. The elk experiment required 10 channels to provide internal telemetry for the instrument and monitoring of external sensors. The data format

selected for the experiment is shown in Figure 4. One such frame of data was collected during each interrogation of the instrument collar. Interrogations were programmed on each overpass for up to five samples for each sensor at intervals of 1.5 minutes. Temperature readings were obtained through thermistors mounted in the appropriate locations. The light-intensity sensor consisted of a standard photodiode mounted at the base of the antenna. A pressure transducer consisting of a bellows, acting on a potentiometer, and a vacuum reference was installed to measure altitude. The transducer bellows mechanism failed, and was inoperative throughout the experiment. Readings of external skin temperature were obtained by a thermistor mounted on a tension arm attached on the inside surface of the collar. The tension was calibrated to enable skin contact under normal activity conditions. Battery voltages were monitored directly, and the received signal strength was obtained at the output of the first intermediate-frequency stage. The electromechanical timer settings were translated into a linear voltage scale to enable orbit-by-orbit monitoring of the instrument's "on" window. Overlapping scales on two thermistors (-40 to +10°C, 0 to +50°C), located at the bottom of the collar to prevent solar hearing and to preclude thermal conductance from the battery power source, provided a range in ambient temperature from -45 to +50°C.

Timer Control

A unique feature of the elk collar which provided a 6-month battery lifetime, despite the high power requirement of the IRLS equipment (150

milliwatts continuous standby), was the low-power electromechanical timer-control unit. The timer served to eliminate standby power by completely unloading the battery during the 12-hour intervals between orbital overpasses. During each overpass a 10-minute "power-on" period was initiated precisely as the satellite came into radio view. Orbital overpasses vary in absolute time from day to day, and the timer provided perfect synchronization with each orbit. Conceptually, the timer represented an electromechanical model of the physical conditions of the Nimbus orbit. In operation, two separate timers were used: a 24-hour earth rotation clock and a 107.417-minute orbital period clock. Contact points on the respective timers were engaged at 12-hour intervals coincident with each satellite overpass. Since the best low-power timers available could not maintain needed accuracy for 6 months, a periodic adjustment was required to maintain synchronization. This was accomplished by using the interrogation link to transmit a special coded sequence of binary bits whenever adjustment was required. The timer setting was monitored at each interrogation.

Pretesting

A mockup fiberglass collar (11.3 kg) to accommodate the IRLS electronic equipment was developed during the summer and fall of 1969. The model was tested for 90 days on a semitame female elk in a large corral at the National Bison Range, Moiese, Montana. The elk experienced no apparent discomfort, nor did the collar interfere with her daily activities. When lowering and raising the head during feeding the

collar slid slowly back and forth on the elk's neck. No skin abrasions or excessive removal of hair resulted from the rubbing.

Meanwhile, the IRLS transponder and Craighead-Varney transmitter were packaged into a metal collar (11.3 kg) of the same configuration. Following the favorable results with the mockup collar, the IRLS instrument collar was placed on the same elk on 20 January 1970. Ten minutes after the elk recovered from the immobilizing drug (M99 -- etorphine) the instrument package was successfully interrogated by the Nimbus III satellite. Over the next 12 days interrogations were obtained on 16 orbits.

Having tested the system on an elk under controlled conditions, preparations were made for testing it on a free-roaming elk at the National Elk Refuge, Jackson, Wyoming. On 5 February two wild female elk were immobilized and fitted with mockup collars to condition them to accept the electronic collar. They were members of a herd of about 10,000 elk that are fed on the Refuge during the winter.

Experiment I

An elk wearing a mockup collar was to be captured and the electronic collar substituted for the dummy collar. Prior to the attempt on 19 February, personnel of the Refuge made a routine census. This disturbed the elk, and close approach to the selected animals was not feasible. A distant shot with a projectile syringe missed the collared elk and struck another animal, which became immobilized within 5 minutes with a dosage of 7 mg of etorphine. The instrument collar was fitted to this

elk, which appeared to be in good condition. She was immobile for 30 minutes, recovering within 3 minutes after an injection of 14 mg of M-285 (diprenorphine), an etorphine antagonist. She rose without difficulty, and ran to rejoin the herd.

At noon on 20 February Nimbus III should have yielded data from interrogation, but failed to do so. Subsequent passes were likewise unsuccessful. It was later determined that installation of the instrument package had occurred during the hourly 6-minute speed-up cycle, disrupting the orbital period setting of the timer. Special commands from the satellite detected a 4 to 5 minute delay in the timer setting, which was then corrected by commands from the satellite. At noon on 22 February data were received from the animal. Simultaneously, field observations indicated that the animal's behavior was abnormal. An attempt to immobilze her and remove the collar failed. The elk died on the morning of 23 February, and an autopsy indicated a type of pneumonia not uncommon in the herd. This animal probably had an incipient stage of pneumonia, and the stress of being captured could have aggravated the infection.

Experiment II

On the morning of 1 April 1970 one of the two females wearing mockup collars was instrumented with the IRLS collar (Fig. 3). A veterinarian was on hand to ascertain the health of this elk. Her body temperature was normal (38.5°C), and she appeared to be in good condition. The drug was again administered by a projectile syringe fired from a gun. During the 27 minutes the elk remained immobile, engineers connected the

electronic components of the two-piece collar. Immediately thereafter the elk received 12 mg of the antagonist. Within 3 minutes she arose, looked around briefly at the observers, and then lowered her head to nibble hay, after which she slowly ran off to join the herd about 200 m away. She immediately encountered another female. Both stood on their hind legs and struck with their forelegs, a behavior pattern which seems to establish dominance-subdominance relationships between individuals within the herd. The animal's behavior indicated a return to normal almost immediately after recovering from the drug.

On 8 April Nimbus IV was launched in an orbit slightly lower than Nimbus III and for 5 days the two satellites were orbiting together, one below the other. Under these conditions the window of the IRLS collar on the elk opened when Nimbus IV was overhead, and this instrument was the first to be interrogated by the new satellite. Good interrogations were obtained on three orbits prior to returning to Nimbus III for further monitoring of the instrumented elk.

Accuracy of Locations

During the period of operation 20 locations were obtained by satellite. On 5 orbits only one frame of data was received, precluding a location computation.

Ground sightings of the elk and radio fixes by field observers within the Refuge were used to determine the accuracy of the satellite locations. Since observations were made during daytime only, the resolution of nighttime interrogations could not be ascertained. Also,

daytime observations could not coincide exactly in time with satellite overpasses, which imparts some degree of uncertainty to the references. Through interpolation of observed positions and radio fixes a set of reference points was derived.

The distance and direction of the satellite position with respect to the corresponding reference position (shown as origin) are plotted in Figure 5. The points on the plot indicated by x's denote locations obtained on near overhead passes where large errors were expected; three additional points obtained under these conditions yielded errors beyond the scale of the plot. Excluding the latter three points, the mean errors were: latitude 4.8 km; longitude 6.2 km. The location distributions shown in the figure fall into the following categories: < 5 km, 5 points; 5 to 9 km, 7 points; > 9 km, 5 points; and 3 points off scale.

The accuracy of locations can be improved by using low profile, omnidirectional, circularly polarized antennas. The particular antenna utilized for the elk experiment afforded coverage above 45° with respect to the horizontal. The most accurate locations are made when the satellite is between 10° and 50° above horizontal. This fact was evident in the large east-west errors (longitude), which are typically less than the north-south errors (latitude). The requirement for small-aperture antennas having moderate gain, circular polarization and light-weight characteristics present many problems to antenna designers. Progress is being made, and will continue as animal tracking grows in importance.

Analysis of Sensory Data

Five internal and five external sensory points were to be monitored with each interrogation, the format of each frame being organized as in Figure 4. From 1 to 29 April 86 measurements were obtained from each sensor, except the altimeter. The day and night distribution was 33 and 53, respectively. Clearly, the night passes yielded more data, which was attributed to improved antenna orientation and stability while the animal was at rest.

Trends observed in various sensors during April are plotted in Figures 6 and 7. The values plotted were selected from one representative data frame from each sequence of interrogations.

The steady increase in voltage levels during the first 3 days of the experiment showed that the solar panels functioned well in charging the batteries. Had charging not occurred, sufficient battery capacity existed to enable the instrument to operate for 6 months. Charge levels remained well above nominal throughout the period, and showed no signs of degradation. Variations in day and night readings were caused by changes in battery leakage rates, which were a direct function of temperature. Trends in voltage and temperature were almost identical. The highest voltages were obtained on D_{15} and D_{20} where temperature readings were high ($+11^{\circ}C$ and $+12^{\circ}C$, respectively). The battery temperature remained above ambient temperature during interrogations (as a result of heating effects of the battery under load and heat from the animal's body), but the trends between battery and ambient temperatures were identical (Figs. 6, 7). Previous studies in winter have shown considerable

increase in battery temperature due to the warming effect of the animal's body (Craighead and Craighead, 1965b).

The accuracy of measuring skin temperature with a thermistor at the point of contact between the collar and the animal's skin requires further testing to determine the changes in insulating effect from sliding of the collar during feeding activity. Individual skin readings taken at 1.5-minute intervals during interrogation sequences suggest that the animal was at rest when the readings were constant and active when the readings were variable. Apparently movement of the collar altered its insulating effect, producing more regular temperature readings when the elk was at rest. The exceptionally high skin temperature (37.5°C), which was near body temperature, on 10 April could have resulted from continued pressure of the thermistor against the elk's neck as the animal lay with its neck resting on the collar. Similarly, a skin temperature of 35.9°C was recorded from an awakened and alert black bear in its winter den as it lay on a thermistor located between the animal's body and the insulating material of its bed (Craighead and Craighead, 1966). An inverse relationship between skin and ambient temperatures, shown in about half the recordings (Fig. 7), could reflect alterations in insulation of the integument due to compaction of hair under the collar or thermoregulatory adjustments in the integument at ambient temperatures near 0°C. Although the data are inconclusive, they show the potentialities for studying thermoregulation by monitoring surface and subcutaneous skin temperature, as well as deep body temperature, using the IRLS system.

The light intensity readings showed perfect correlation with day and night conditions throughout the experiment. The nighttime readings remained identical in value, while the daytime readings fluctuated with light intensity. The values varied from bright sun to shaded sun, with the majority in the brighter area. No readings were obtained under forest canopy, but results indicate the feasibility of determining whether an animal is in open or timbered situations.

Movements of the Elk

Except for the longer movements, the locations obtained with the IRLS system were too inaccurate for determining the local minimum movements of the elk within the Refuge. For long-range migrations satellite locations of the elk's position could have yielded useful new information.

Contact between the elk and the satellite was lost on 1 May when the collar inverted. Communication was impossible with the antenna pointing groundward. Until 10 June the elk was located by the ground-tracking system. When the elk moved far or rapidly it was relocated by air, using a Cessna 150 with a small loop antenna attached to the wing strut. Under favorable conditions the signal was received in the airplane from a distance of up to 40 km at altitudes above ground level of 300 to 1,000 m, the strength of the signals improving with altitude. On 15 May when the elk had moved to the northern portion of the Refuge she was approached, using the directional receiver, and was observed to feed and run well with a band of 15 elk. The instrumented elk appeared in

better physical condition than most of the other elk. Two days later she left the Refuge, moved north along the east side of Blacktail Butte, and arrived the following day in the area of Signal Mountain, 28 airline km from her last position on the Refuge. After remaining here and in the area of Uhl Hill and lower Spread Creek for 5 days the elk began moving up Spread Creek on 25 May, traveling southward into the Gros Ventre drainage to Slate Creek. There she joined a group of about 300 elk that annually calve in the area. When observed closely on 8 June she appeared to be in good physical condition. Most of the winter coat remained, and no abrasions or sores that might have been caused by the collar were observed. The elk was last located by ground-tracking radio on 10 June. The next contact was on 28 July in Cottonwood Creek about 20 km east of Slate Creek. On 14 November the instrumented elk was inadvertently shot 8 km from Cottonwood Creek by a hunter when the elk's head and shoulders were hidden in trees. This was immediately prior to her expected safe return to the National Elk Refuge. An autopsy of the animal showed that she was in good physical condition and pregnant; her kidney fat index was 175 (Riney 1955) and the femur marrow was white and did not compress (Greer 1968); the left ovary contained a corpus luteum 13 mm in diameter; the embryo was in the thread stage with membranes approximately 18 inches long.

The circuitous route taken by the elk to reach its summer range, covering about 65 km, rather than traveling directly up the Gros Ventre River valley for a distance of about 20 km, was unanticipated. The route taken also involved crossing a high divide that was still snow-bound. These observations indicate that the detailed movements involved

in an elk migration can be studied with a combination of ground and satellite tracking equipment. Such information is valuable in the management of elk populations.

Summary

Free-living animals can be tracked and monitored by satellite in natural environments, as indicated by the present feasibility study with the IRLS system. Satellite interrogations of an instrument collar on an elk at the National Elk Refuge were made over a period of 30 days, with a mean error of 4.8 km for latitude and 6.2 km for longitude. Improvement of the resolution of locations to within 1 km requires the development of low profile, omnidirectional, circularly polarized antennas.

Sensory data from the instrument showed the solar cells functioning so effectively that the number of batteries could have been reduced substantially to conserve weight. The data on skin temperature require verification by future experiments. They do, however, demonstrate the potential for monitoring physiological and environmental parameters with the 28 channels of the IRLS system.

The prototype instrument collar has weight limitations. Information derived from the experiment provided a basis for calculating a potential reduction in weight by at least 50%. A 5 kg instrument collar will make the IRLS system available for a wider variety of animals. Microminiaturization could reduce the weight of the IRLS package still further. However, IRLS is a highly regimented two-way system, and weight reduction has a limit. Weight limitations lie between 5 to 10% of the

animal's body weight. There is, therefore, a need to develop satellite systems with instrument packages useful for birds and other small animals. The doppler-shift system has been proposed (Balmino, et al., 1968; Buechner and Maxwell, 1968) to bring the weight of the instrument on the animal to 50 g or less.

Satellite tracking and data-collection systems provide powerful new tools for studying biological phenomena, such as animal migration, and for obtaining information useful in the management of ecosystems and wildlife and fisheries resources. Additional cooperative research projects among biologists and engineers could advance this new technology to a widely applicable and economical system over the next decade.

Acknowledgements

This project was a joint endeavor between the Smithsonian Institution and the National Aeronautics and Space Administration, conducted in collaboration with the Montana Cooperative Wildlife Research Unit, the Environmental Research Institute, the State University of New York at Albany, and the National Geographic Society. Pretesting was conducted at the National Bison Range, Moiese, Montana, in cooperation with the U.S. Bureau of Sports Fisheries and Wildlife. The experiment was carried out at the National Elk Refuge, Jackson Hole, Wyoming, in cooperation with the U.S. Bureau of Sports Fisheries and Wildlife, the Wyoming Game and Fish Commission, the U.S. Forest Service, and the National Park Service.

We thank biologists Harry V. Reynolds III and Vincent Yanonne, and graduate student Steven M. Gilbert of Montana State University, for assistance, especially in making field observations. The idea of tracking animals by satellite was proposed several years ago. It has been encouraged by Sidney R. Galler, Assistant Secretary (Science), Smithsonian Institution, and also by George J. Jacobs, Chief, Physical Biology, National Aeronautics and Space Administration, both of whom we acknowledge for their help and inspiration. Joel R. Varney, Research Associate, Montana Cooperative Wildlife Research Unit, University of Montana, played an important role in testing and applying the electronics systems throughout the study. James C. Maxwell, Staff Engineer, Ecology Program, Office of Environmental Sciences, Smithsonian Institution, also

aided in the pretesting of the IRLS collar. Radiation, Inc., of Melbourne, Florida, conformed the IRLS instrument into the collar for the elk. Previous research under NSF (G-17502) and AEC AT(45-1)-1929 made possible the use of the ground radiotracking system. This study was supported by a grant (NASW-1983) to the Smithsonian Institution by the National Aeronautics and Space Administration.

References

Balmino, G., S. J. Criswell, D. L. Fernald, E. H. Jentsch, J. Latimer, and J. C. Maxwell. 1968. Animal tracking from satellites. Smithsonian Astrophysical Observatory Spec. Rep. No. 289, Cambridge, Mass. 40 p.

Buechner, H. K. and J. C. Maxwell. 1968. Proposal for an experiment to track animals from artifical satellites. Smithsonian Institution, Astrophysical Observatory, Cambridge, Mass. P 140-9-68.

Cote, C. E. 1969. The interrogation, recording and location system experiment. Goddard Space Flight Center Publ. No. X-733-69-336. 22 p.

_____. 1970. The interrogation, recording and location system experiment. Geoscience Elec. Symp. Trans. IEEE, Spec. Issue. 5 p.

Craighead, F. C., Jr. and J. J. Craighead. 1963. Progress in biotelemetry studies of grizzly bears. Proc. 18th Ann. Instru. Soc. Amer. Conf. Biotelemetry Session, Chicago.

_____ and _____. 1965a. Tracking grizzly bears. BioScience 15(2):88-92.

_____ and _____. 1965b. Yellowstone field research expedition V. State Univ. of N. Y. at Albany Publ. No. 31, ASRC. 8 p.

_____ and _____. 1966. Radiotelemetry of large western mammals. Prog. Rep. 1965-66. AEC Contract No. AT (45-1)-1929. 67 p.

Cressey, J. R., and G. D. Hogan. 1965. The interrogation, recording and location system experiment. Proc. Nat. Telemetering Conf. Sec. VI. 6 p.

Greer, K. R. 1968. A compression method indicates fat content of elk (Wapiti) femur marrows. J. Wildl. Mgmt. 32(4):747-751.

Riney, T. 1955. Evaluating condition of free-ranging red deer (Cervus elaphus), with special references to New Zealand. J. of Sci. and Tech., Sec. B. 36(4):429-464.

Table 1. Specifications of elk collar

Transmitter (FM)	
Power	15 watts
Frequency	466.0 MHz
Band Width	100 KHz
Receiver (FM)	
Sensitivity	-114 DBM
Frequency	401.5 MHz
Band Width	100 KHz
Antenna	Crossed Dipole; 2 DB gain; right circular
Sensors	10 (1% accuracy)
Batteries	Nickel Cadmium (20)
Solar Panels	Cadmium Sulfide (710 cm^2)
Weight (kg)	
Antenna	.477
Antenna cover	.350
Electronics	1.058
Electronics housing + solar cell cover	1.149
Batteries	2.097
Battery housing + solar cell cover	1.149
Transmitter/Receiver	1.149
RF housing	.649
Collar materials	1.571
Ground tracking transmitter	.717
Cable + connectors	.908
Total	11.274

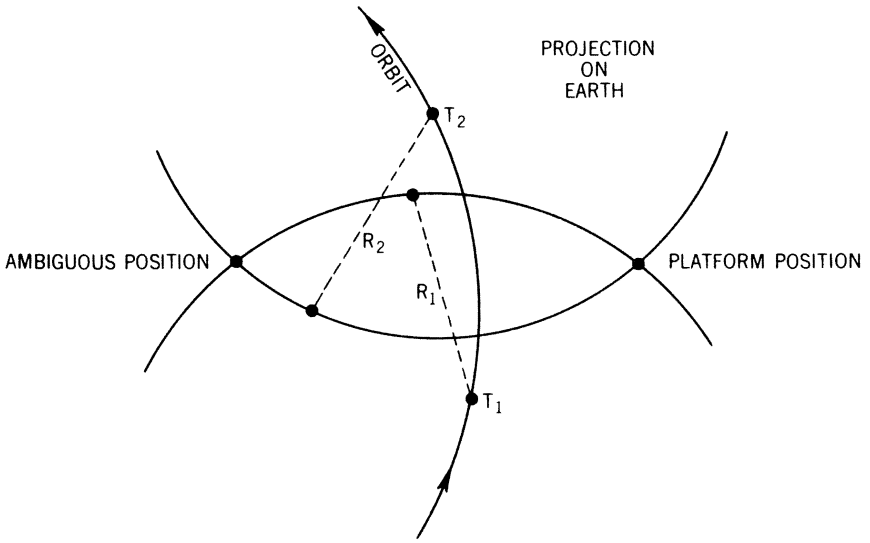

Figure 1: Short-range distances (R) from the satellite to the platform generate spheres in space with the satellite at the center. Where two such spheres intersect the earth, intersecting circles are formed on the earth's surface. The animal is located at one of the two points of intersection of the circles, the ambiguity being resolved by prior information of the animal's last position.

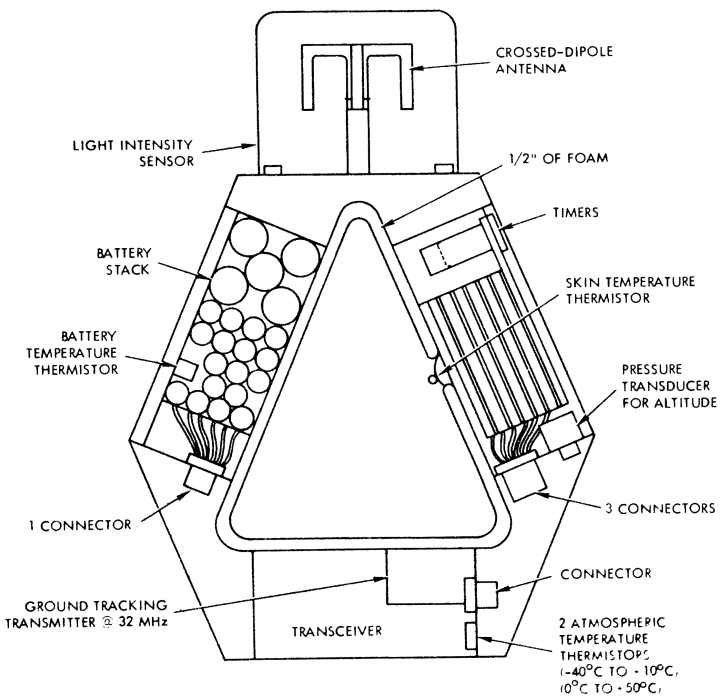

Figure 2: Cross-sectional view of IRLS collar



Figure 3: Elk with IRLS collar

DATE OF RUN	MO.	DAY	YR.	
	4	28	70	
ORBIT NUMBER	5082			
PLATFORM ID	105452			ELK
COMMAND TIME	HH	MM	SS.S	
	07	54	10.6	
FRAME		1		

DATA RECEIVED

2 UNUSED	1 UNUSED
4 ALTIMETER	3 UNUSED
6 +12 VOLT BATTERY	5 RECEIVER SIGNAL
8 BATTERY TEMPERATURE	7 SKIN TEMPERATURE
10 -40 TO +10°C AMBIENT	9 0 TO +50°C AMBIENT
12 TIMER	11 +4.8 VOLT BATTERY
} UNUSED 28	13 LIGHT INTENSITY
	} UNUSED 27

COMPUTED PLATFORM LOCATION

LAT.	LONG.	DAY	TIME HH	MM	SS.S
43.492N	110.721W	118	07	54	11.0

Figure 4: Format for computer printout of a frame of data

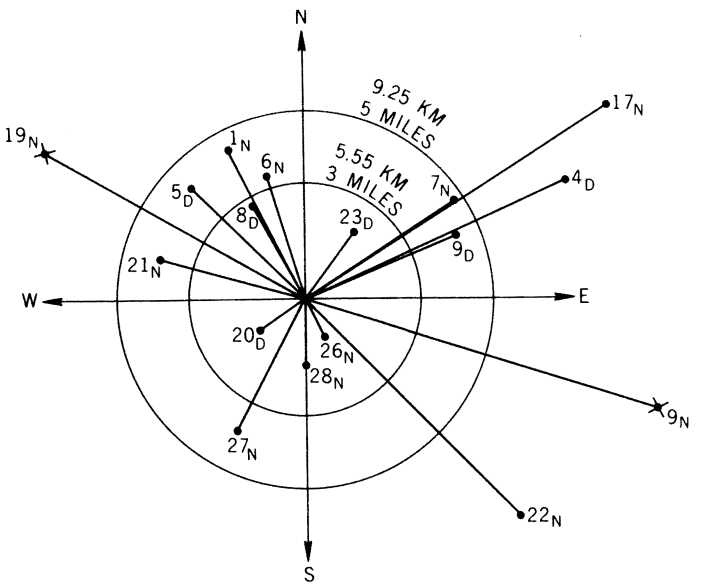

Figure 5: Resolution of positions determined by satellite. Numbers indicate day of month; subscripts indicate daytime (D) and nighttime (N). Origin represents zero error in distance; compass directions indicate direction of error from position observed on the ground.

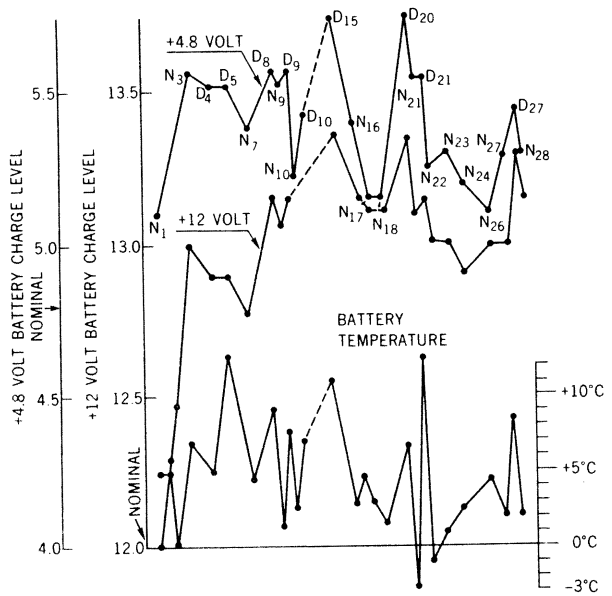

Figure 6: Battery voltages and temperature monitored by satellite. Letters indicate daytime (D) and nighttime (N); subscripts indicate day in April. Dotted line shows 5-day interruption at launching of Nimbus IV.

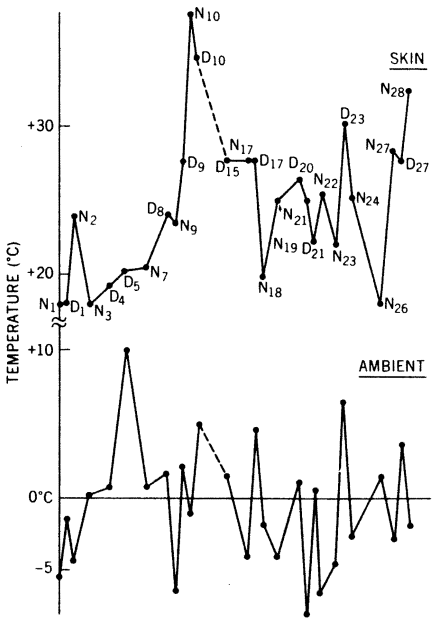

Figure 7: Ambient and skin temperatures monitored by satellite. Letters, subscripts, and dotted line same as figure 6.

GRIZZLY BEAR PREHIBERNATION AND DENNING ACTIVITIES

AS DETERMINED BY RADIOTRACKING

Frank C. Craighead, Jr.
State University of New York, Albany, N.Y.
Atmospheric Science Research Center
Environmental Research Institute, Moose, Wyo.

John J. Craighead
Bureau of Sport Fisheries and Wildlife
University of Montana, Missoula, Mont.

- 1971 -

INTRODUCTION

Grizzly bears (Ursus arctos horribilis Ord) were seen and collected on our western prairies in 1805 by Lewis and Clark, who recognized them as a species distinct from the black bear (Ursus americanus Audubon and Bachman). Grizzlies have disappeared from most of the western states where they were once common. In just over two human life spans, the grizzly has become an endangered species in the contiguous 48 states. Storer and Tevis (1955) estimated that in California alone the original grizzly bear population was around 10,000 animals. The last grizzly in California was seen in 1924. In Yellowstone National Park and adjacent portions of four national forests, an area of approximately 5,000 square miles, there are between 175 and 200 grizzly bears (Craighead and Craighead 1967). This is probably the largest discrete population of grizzlies left in the Continental United States except for Alaska.

Because the Yellowstone grizzly is largely nocturnal, inhabits a heavily timbered area of rugged terrain and enters its den for a winter sleep that lasts 5 to 6 months, it was necessary to develop and employ a radiotracking and locating system (Craighead et al. 1963, Craighead and Craighead 1965). Such a system enabled us to gather data on den site selection, den construction, prehibernation behavior and denning activities as one facet of a comprehensive ecological study of the grizzly bear (Craighead et al. 1960).

Prior to this study, little was known concerning the denning activities and prehibernation behavior of wild grizzlies. Dens

reported to us, as those utilized by grizzlies, turned out to be the dens of black bears. It was generally thought that the Yellowstone grizzlies, like black bears and the European brown bears (Ursus arctos arctos L.), utilized natural shelters -- caves, hollow trees, windfall and dense vegetation -- as sites for their "hibernation" dens (Couturier 1954). These were supposedly enlarged by digging, or improved to varying degrees as shelters for the long winter sleep.

In November 1963, we successfully tracked a 5-1/2-year-old female grizzly, No. 164, to her winter den (Craighead and Craighead 1965). As far as we know, this is the first instance in which a radio transmitter was used to track and locate a grizzly bear as it entered its winter den.

In 1961 we began developing and testing radiotracking equipment and we continued this work through the fall of 1968. During this 8-year period, we made 48 instrumentations of 23 different grizzly bears. These animals were tracked or monitored for a total of over 1,200 tracking days; den location sometimes required monitoring for 3 months and intensive tracking for 4 consecutive days. Grizzly bear No. 40 (Fig. 1) was instrumented and monitored for portions of 8 consecutive years. Seven other bears were instrumented and monitored during 2 consecutive years each. The winter dens of six different grizzlies were located, but since more than one den was located for some bears over a period of years, we were able to obtain information on size and construction of 11 dens. Due to involvement of family groups,

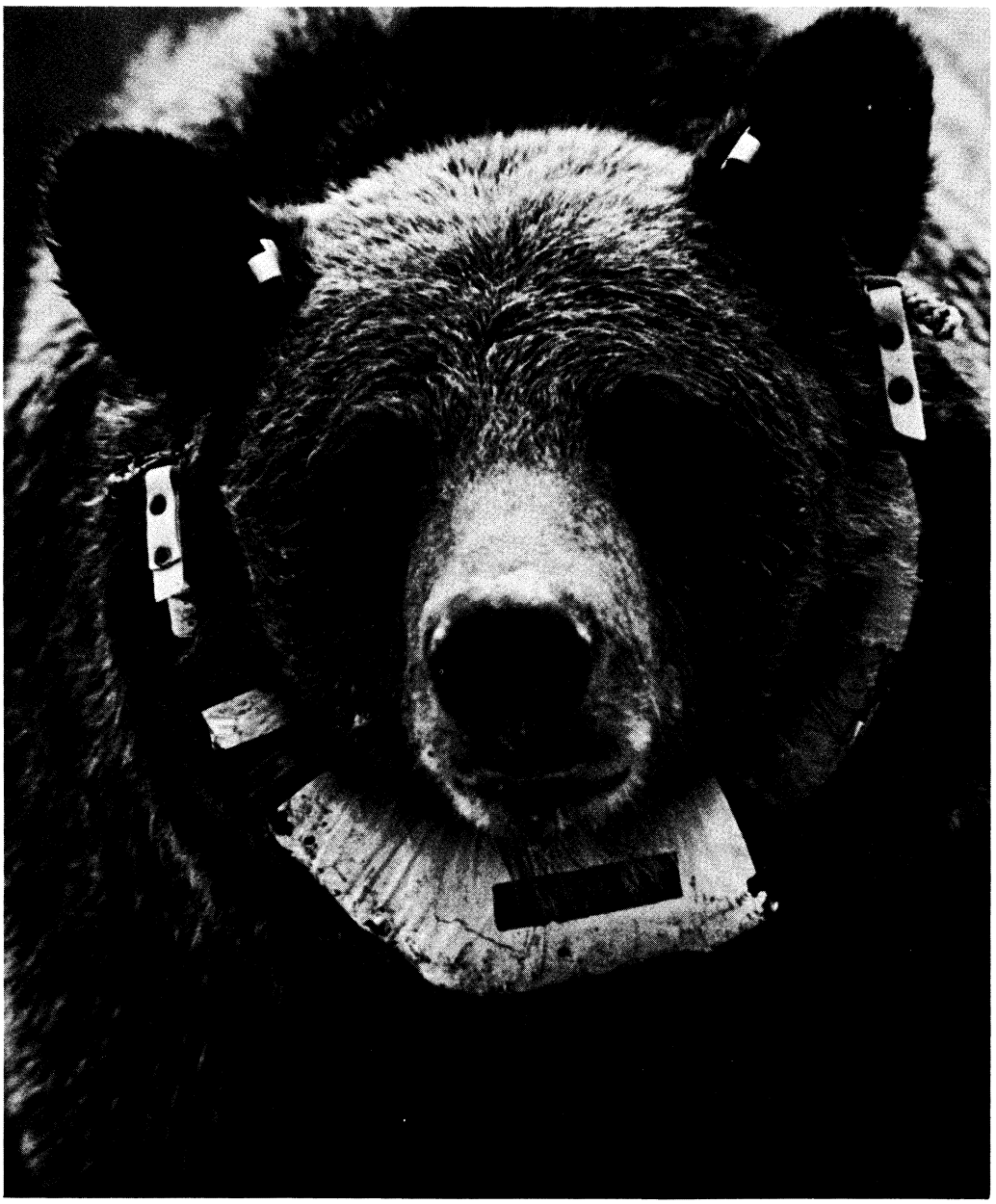

Fig. 1. Female grizzly bear equipped with radio collar. This grizzly, No. 40, was radiotracked for portions of 8 consecutive years. Note placement of numbered ear tags and individualized color markers.

22 animals were radiotracked and observed to have utilized the 11 dens.

A short discussion of hibernation, or winter sleep, seems appropriate since differences in hibernators, and variances in how they hibernate, have caused researchers to formulate varying definitions of this phenomenon. Species differ in the duration of hibernation, the degree of drop in body temperature, the relation of body temperature to ambient air temperature, the accumulation of fat reserves, the depression of metabolic activities, and the variations in specialization of individual organs and tissues for functioning in the hibernating state. The bear, for example, shows less change in body functions and is generally considered less of a "true" hibernator than the ground squirrel (Lyman and Dawe 1960, Kayser 1961).

If we use Hock's (1960) definition of hibernation -- ". . . a periodic phenomenon in which body temperature falls to a low level, approximating ambient, and heart rate, metabolic rate, and other physiologic functions fall to correspondingly minimum levels . . ." -- the grizzly bear is not a hibernator. Instead of hibernation, Hock has proposed the term carnivorean lethargy to describe the bear's winter sleep. Hock also pointed out, as have others, that hibernators must compress their annual cycle of activities into a few months. Nearly all facets of hibernators' life histories and consequently their physiologic functions reflect the fact that they are constantly preparing for hibernation, hibernating, or recovering from the condition. Thus, the whole year is involved in a cyclic phenomenon that is related

to hibernation. In northern latitudes, this is true of bears.

Authors suggesting that the bear is not a hibernator point out that, though bears go into a deep sleep and are inactive for considerable periods of time, they do not become torpid and helpless, as do most hibernators (Kayser 1961:21-50). Bears can be readily aroused after which they can react quickly and energetically to disturbance, and their body temperature does not approach the ambient air temperature. The temperature of wintering female bears was found to be 84.2°F. to 93.2°F. (Kayser 1961). After anesthetizing and instrumenting a hibernating black bear, we recorded a depressed body temperature of 83.5°F. (due to drug action) which gradually rose to 96.7°F. over a period of 21.5 hours (Craighead and Craighead 1966). Temperatures taken every half hour over a 24-hour period ranged from 93.7°F. to 96.3°F. (Craighead and Craighead 1967). This is a drop in body temperature ranging from 4.7°F. to 7.3°F. below the body temperature of 101°F. recorded during summer. Folk (1967) obtained a low heart rate of 8 beats per minute from a hibernating grizzly in captivity and Kalabukhov gives the respiratory frequency for a wintering European brown bear of 12/min. (Kayser 1961). Hibernating bears show a marked depression in heart rate and respiratory frequency, but a relatively slight drop in body temperature.

In animals of all sizes, potential energy reserve is proportional to body weight. Also basal metabolic rate is weight dependent -- the larger the animal, the lower the metabolic rate. Larger animals

can thus fast longer than smaller ones without a modification in metabolic level. A bear with fat reserves going into winter sleep can fast 200 days (7 months) with only a slight reduction in body temperature. This is not possible for "true" hibernators. Morrison (1960) stated that because of its low thermal conductance, the bear cannot maintain a body temperature near the ambient air temperature. He concluded ". . . in any event, it is clear that bears lie in the interfacial zone between animals which might last through the winter at or near their basal metabolic rates and those which cannot." The limited depression of body temperature observed in bears may qualify them as "ecological" hibernators and disqualify them as "physiological" hibernators (Morrison op. cit.). This distinction is useful if we recognize that black and brown bears are superbly adapted to sleeping through long winters without great modification in metabolic level and in this sense are hibernators.

Hibernation is generally considered to be a torpid state in which the hibernator, partially or wholly, loses its sensibility or power of motion. This is a state from which the animal can be aroused only with difficulty. Thus, bears during their winter sleep are dormant rather than torpid because they can be rather easily aroused and they can move rapidly when disturbed -- features enhancing survival of a group of mammals that have been hunted by man since prehistoric times. Low ambient air temperatures, deep snow, and the unavailability of food appear to make hibernation or winter sleep essential to the survival

of grizzlies in the Yellowstone area.

ACKNOWLEDGEMENTS

This phase of a long-range, ecological study of the grizzly bear could not have been conducted without the help of numerous individuals and support from many organizations. We extend special thanks and credit to Joel Varney, who designed and constructed the radiotracking equipment; to Bart O'Gara for helpful suggestions; to Maurice Hornocker; Robert Ruff; Henry McCutchen; Charles Ridenour; Harry Reynolds, III; Harry Reynolds, Jr.; Jay Sumner; and Jack Seidensticker; all of whom, at one time or another, aided us in testing equipment, collaring animals, or tracking grizzly bears to dens or den sites. The comradeship developed during these times and the sharing of exciting and challenging experiences are not recorded in this paper but, nevertheless, they are very much a part of it.

Special thanks are also due Mr. Lemuel Garrison, former Superintendent, and other personnel, of Yellowstone National Park; Dr. Melvin M. Payne, President, National Geographic Society; and Mr. Frank H. Goodyear, Treasurer, Environmental Research Institute. All, in different ways, encouraged us in our research efforts.

This study was supported throughout its entirety by the National Geographic Society; it was also supported by Research Grant GB-2672 from the National Science Foundation; continuing Grant AT (45-1)-1929 from the Atomic Energy Commission; and funds from the

Bureau of Sport Fisheries and Wildlife.

In addition, we gratefully acknowledge financial aid from the Environmental Research Institute and the Philco-Ford Corporation. We received help and cooperation from the National Park Service, the University of Montana, the Montana Fish and Game Department, the State University of New York at Albany (Atmospheric Sciences Research Center), and the Yellowstone Park Company.

STUDY AREA

The study area in Yellowstone Park and the surrounding national forests lies largely between 7,000 and 8,000 feet altitude. Extremes are reached at Electric Peak (11,155 feet) and near Gardiner, Montana (5,282 feet).

Eighty to 85% of the area is timbered, and most of this lies within the spruce-fir (Picea-abies) zone. Lodgepole pine (Pinus contorta Dougl.), in transition to the spruce-fir climax, covers nearly 75% of the Park (Baggley and McDougall 1956). Sagebrush and grass dominate dry areas of rich soil for long periods before finally succumbing to the invasion of lodgepole pine and, in some instances, aspen (Populus tremuloides Michx.). Areas of sagebrush-grass are important to the grizzly bear. Other habitats important to grizzlies are the alpine and subalpine meadows of sedge-bluegrass (Carex-Poa). These are characterized by grasses, sedges, and numerous dwarf herbaceous plants. Such open-land types in combination with timbered areas appear

essential for optimum grizzly bear habitat. The open types provide the bulk of their food, and the timbered areas provide food (such as berries and pine nuts), daytime retreats, and denning sites. Although the timbered land consists primarily of the relatively sterile lodgepole pine forests, there are extensive areas where these are being invaded by limber pine (Pinus flexilis, James) and whitebark pine (Pinus albicaulis, Engelm.), both of which, when mature, furnish crops of pine nuts in favorable years. A variety of berries in burned-over areas and in the understory of timbered types are eaten by grizzlies. The most important are the big whortleberry (Vaccinium membranaceum Dougl.) and the grouse whortleberry (Vaccinium scoparium Leiberg).

The average maximum temperatures during the summer are in the seventies. The highest recorded temperature is 98°F., and the lowest -66°F. Temperatures of -40°F. and below have been recorded, at some time, from all areas of the Park where temperature records have been kept. Snowfall is heavy over most of the Park; annual snowfall averages close to 150 inches. Annual precipitation varies from 13.73 to 38.26 inches (Anon. 1959).

Carrion forms a considerable portion of the diet of the grizzly bear, and its availability and abundance influences grizzly bear activity and behavior, especially prior to and following hibernation. In Yellowstone National Park, the estimated populations of large mammals include: black bear, 500; pronghorn (Antilocapra americana Ord.), 170; bighorn sheep (Ovis canadensis Shaw), 600; bison (Bison bison L.).

580; mule deer (Odocoileus hemionus Rafinesque) in winter, 500; elk (Cervus canadensis Erxleben) in winter, 8,300; and moose (Alces alces Nelson) in summer, 450 (Anon. 1970).

Carnivores sufficiently numerous to compete with the grizzly for food include the coyote (Canis latrans Merriam), black bear, and badger (Taxidea taxus Shreber).

METHODS

To obtain information on prehibernation behavior and denning activities of grizzlies fitted with radio transmitters, the position and movements of instrumented bears were plotted from the intersection of bearings (fixes) which were made from a distance. Then, guided by the fixes and using portable directional receivers, we moved on foot to observe the animals at close range.

The radiotracking system was designed to be as flexible and portable as possible to provide maximum use in various types of field work. A block diagram of the location system is shown in Fig. 2. The transmitter collar radiates a pulsed signal which can be received by a variety of stations, depending on the desired range and portability of the receiver.

A small, 2 lb. battery-operated receiver with a directional loop antenna was used for tracking on foot when the distance between the receiver and the instrumented animal was not greater than 3 to 4 miles (Fig. 3). The range was limited by the small size of the antenna

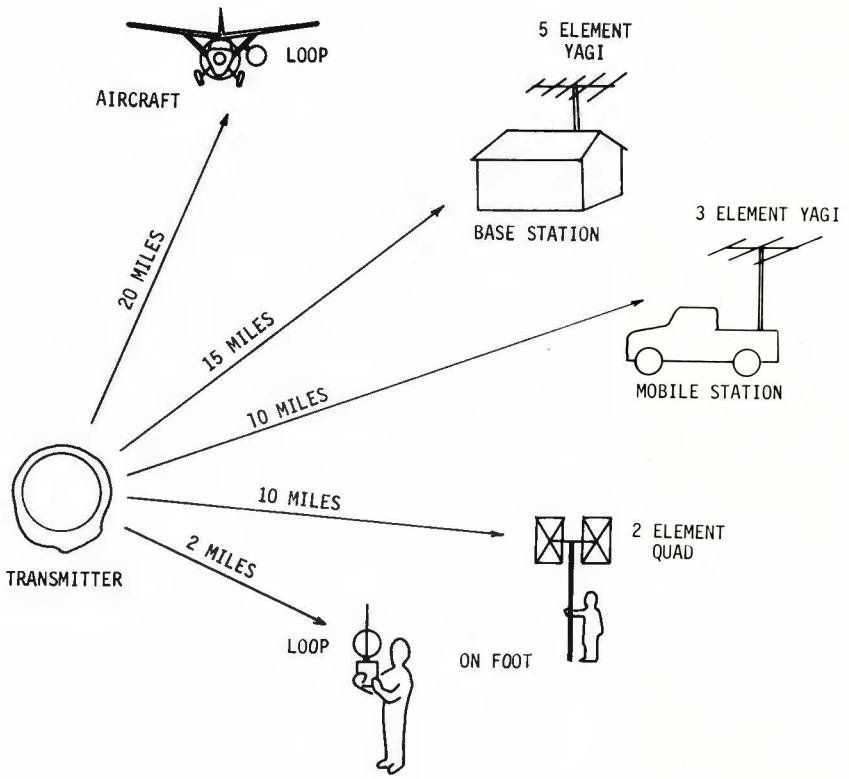

Fig. 2. Radio Location System

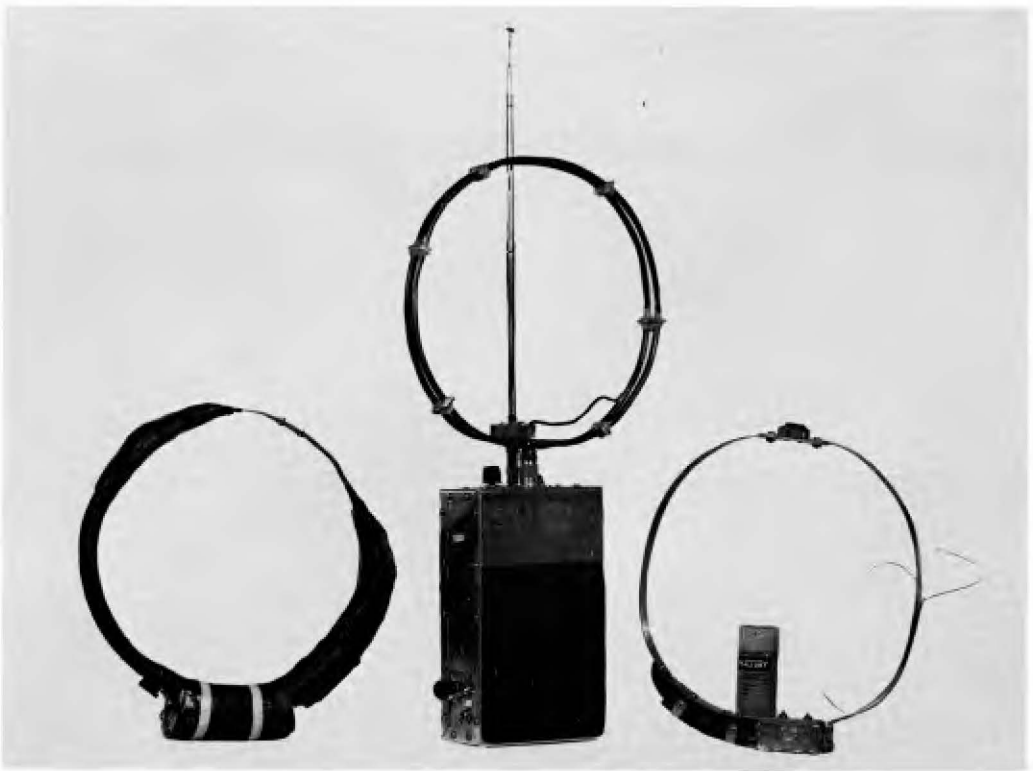

Fig. 3. Transmitter collars and a portable, directional receiver.

and varied greatly with shielding effects in mountainous terrain. For longer range, a larger quad antenna was used with the same receiver. When an animal was in a location where tracking from nearby roads was possible, a 3-element yagi antenna mounted on a vehicle provided an accurate working range up to 10 miles. A more sensitive, 5-element yagi antenna located at a base station gave a maximum range of 15 miles. Fixed-wing aircraft or helicopters with the directional loop antenna mounted on the fuselage were used for more remote locations with up to a 20 mile range. The transmitter collar which was placed on the animal to be tracked consisted of the transmitter unit and a battery pack attached to a circular metal strap which acted both as a loop antenna and a collar. The assembly was covered with fiberglass-reinforced acrylic resin to protect the electronics and batteries, and to prevent flexing and bending which would otherwise have caused antenna detuning or eventual breakage. The inside of the collar was padded with rubber hosing or foam rubber or a combination of both to make it fit the animal snugly and comfortably.

The collar was designed so the metal strap could be adjusted to the desired neck diameter by inserting two screws in a series of holes in the overlapping ends of the strap at the time it was placed on the animal. After the screws were placed and tightened, the collar tuning was adjusted for resonance with the aid of a field strength meter. Field measurements showed, however, that the shift in antenna tuning was negligible, if the strap length was not changed when the

collar was placed on the animal. Thus, we decided to tune the antenna in the laboratory. This was possible since the size of the animal's neck was known from previous measurements or it was possible to estimate this from our weight records while the collar was being prepared. This eliminated field tuning; final adjustments to collar size were made by adding or removing a small amount of padding when placing the transmitter on the animal.

Power for the transmitter was provided by a pack of seven Mallory*, type Rm-1450, low-temperature, mercury cells. The battery pack was waterproofed by a combination of electrical tape, wax, and silicone rubber. It was attached to the collar next to the housing of the transmitter. A photograph of two radio collars and a portable receiver is shown in Fig. 3.

We used two types of transmitters in tracking operations. One type was designed to operate continuously, emitting a 50 ms pulse at approximately 1 second intervals. The battery life with this type of transmitter (called the standard model) was 3 months. In some cases we required a longer lifetime, so an additional timer circuit was used to turn the transmitter on and off at 30 second intervals. This type of transmitter was called the extended life model. Battery life was 9 months. All transmitters of both types operated on the same frequency, but each had a different pulse rate which allowed each grizzly to be identified.

* Use of brand names does not imply endorsement of a product by the authors or the supporting agencies.

Transistorized receivers were used for tracking on foot and from base and mobile stations. Various kinds of antennas could be connected to a receiver, depending on the location in which it was used. The receivers were battery-operated, Citizen's Band units modified to operate at 32 MHz. Early in the study some tracking at base and mobile stations was done with general-coverage communications receivers; however, these were later discarded in favor of the portable units.

Summaries of the transmitter, receiver, and system characteristics are given in Tables 1, 2, and 3.

The accuracy of directional bearings depended on the type of antenna being used. The loop antenna provided the most accurate bearings of any of the antennas because its pattern has two sharp nulls which allow determination of the direction of a signal within a few degrees. Because of its small size, it was the least sensitive antenna, but it was more useful than other antennas at short range. The accuracy of directional bearings taken with the loop antenna was sometimes reduced by propagation effects in the mountainous terrain in which the tracking was conducted; dense timber could cause multiple reflections of the signal which obscured the null in the antenna pattern, and reflections from large topographic features such as hillsides and cliffs sometimes gave false bearings. Such problems could be circumvented when moving in on an animal by hiking to a slightly different location, climbing a tree, or continuing to move on in the general direction of the signal until conditions improved enough to permit more accurate bearings to be taken.

TABLE 1.--TRANSMITTER CHARACTERISTICS

Frequency	32 MHz
Output power	100 mW pulse
Pulse width	50 ms
Pulse repetition rate	1 per second (nominal)
Antenna type	resonant loop, 11 inch diameter
Antenna impedance	50 ohms
DC input power	280 mW peak, 18 mW average
Battery type	mercury, low temperature 9.3 volts, 4.5 Ah
Weight:	
electronics	0.1 lb
battery	0.9 lb
complete collar	2.0 lbs
Operating lifetime	3 months standard, 9 months with additional timer

TABLE 2.--RECEIVER CHARACTERISTICS

Frequency	32 MHz
Type	dual conversion, crystal controlled
Bandwidth (3 dB)	3 kHz
Sensitivity	-123 dBm nominal for 10 dB S/N
Battery type	Nickle-cadmium, 225 mAh
Size	3 x 7 x 8 inches
Weight	2 lbs
Battery life	10 hours between charges

TABLE 3.--SYSTEM RANGE WITH VARIOUS RECEIVING ANTENNAS

Antenna Type	Antenna Gain	Use	System Range*
Loop (11" dia.)	-10 dB (est.)	on foot	2 miles
		from aircraft	20
Dipole (reference)	0	--	
Quad	5	field station	10
3 element yagi	7	field station	10
5 element yagi	9	base station	15

*Typical value -- varies widely with terrain

The yagi and quad antennas that were used for longer distance tracking had relatively broad patterns (45° to 60°), but bearing accuracy on the order of a few degrees could be obtained by rotating the antenna until the signal disappeared on either side, then bisecting the angle formed by the fade-out points. The slightly reduced accuracy of the larger antennas in comparison to the loop was not especially troublesome, since the long-distance bearings taken with the large antennas were usually intended only for rough location purposes before moving in on the animal with a portable receiver.

Normal tracking procedure was to record a signal from an instrumented grizzly at the base station using the 5 element yagi antenna. The direction of the signal source was plotted on a topographic map. A second and frequently a third bearing was made with the mobile unit. The intersection of the bearings generally fixed the animal's position to within a 1/4 to 1/3 mile area on the map. We then hiked to within 2 to 4 miles of the fix and activated the portable receiver.

When within range of the animal, we took a bearing by rotating the loop antenna of the portable receiver until a null was obtained. A null occurs at right angles to the plane of the loop and indicates that the animal is on a bearing bisecting the loop. The pattern of the loop antenna is symmetrical, so an ambiguity in the direction of signal arrival remains after the directional bearing is established. This ambiguity is resolved by activating the sense antenna, which is a vertical whip mounted next to the loop (Fig. 3). The sense antenna

suppresses one lobe of the loop antenna pattern and gives a non-symmetrical pattern from which the direction of signal arrival can be determined (Varney 1971). Thus, an increase in signal strength from the nonsymmetrical pattern enabled us to determine the source of the signal and move toward the instrumented animal; a decrease warned us that we were headed in the wrong direction.

As the instrumented animal was approached, the signal strength increased so that, at about 1/4 mile, a null became difficult to obtain. The receiver sensitivity setting was then altered to reduce the signal strength and get a null; the remaining distance to the instrumented grizzly was covered by following the null. Signal volume provided a good indication of distance between the bear and the observer. Using the portable receiver in this way, we frequently approached grizzlies to within 100 feet without disturbing them. The average distance at which we "jumped" them from daybeds in dense timber and windfall was 125 feet.

Locating grizzly No. 150 on 10 October 1964 was typical of our tracking operations. Hiking toward a previously established fix, the grizzly was located and "jumped" 8 miles from our base station and 3 miles from the field station where the signal bearings were taken. The bearing from base was 2.5^{o} in error. The base receiving station was 120 feet lower than the grizzly and there was a 200 foot timbered ridge between the base station and the instrumented animal. In spite of this shielding ridge, grizzly No. 150 was successfully located on

this and other occasions. Both bearings and field fixes were made almost daily on this animal for several months.

Because of varying field conditions, some variations in the strength of the signal transmitted by different collars, and occasional equipment problems, we found that successful radiotracking required considerable judgment by the equipment operator. This judgment improved with field experience. Normally operating equipment, used by inexperienced personnel, did not always produce successful results.

Grizzly bears that we planned to track to dens were generally instrumented in late summer or early fall. These animals were radio-located almost daily either from the base station or in the field. When location data showed that an animal had moved from a bedding area or center of activity, we moved in on the animal using the portable receiver in order to make visual observations. Instrumented animals were followed on prehibernation treks to denning areas whenever possible; however, at such times the bears were not closely pursued. Our main objective was to maintain radio contact with the animal. We generally travelled the ridges to get better reception and on occasion bivouaced at elevated sites to continue monitoring throughout the night. If its nocturnal travels had carried it beyond the range of our equipment, this procedure enabled us to relocate the animal quickly the next day by moving in the direction of the last signals received.

We found it was not unusual for some grizzlies to move 10 to 15 miles during a 12-hour period. When this occurred in rough terrain

and the animal continued to move, it required anywhere from several days to a week of radio-searching to relocate the animal. In a few cases, when radio contact with a grizzly was lost during periods of extensive movements, it was not relocated. However, without exception, such animals were recaptured the following spring and the collars removed and/or replaced.

In general, the grizzlies adjusted well to the radio collars and did not attempt to remove them. Occasionally an animal would lose its collar, especially if it was one placed on the bear early in summer because we fitted such collars loosely to allow for an increase in weight and neck diameter without causing discomfort. Collars lost in this manner were easily retrieved. For instance, a transmitter collar removed by a grizzly but still operative was recovered by following a signal bearing made from a distance of 9 miles. When 2 miles away, we used the portable receiver which guided us to within 15 feet of the collar where it was sighted and retrieved. Two other collars dropped by grizzlies were similarly recovered.

In rare instances light planes were used to locate grizzlies. The search pattern consisted of flying to the point of last radio contact and monitoring the terrain in ever-widening circles. When we heard a signal, we utilized a combination of antenna nulls and signal strength to indicate the necessary flight course. Once in the near vicinity of the grizzly, its approximate location could be determined by an increase in the audio signal to peak volume as we flew over the

animal and a gradually fading signal as we passed over and beyond. By dropping to an altitude of 500 to 1,000 feet, the exact position of the bear could be plotted on a topographic map. On one occasion an instrumented animal was sighted and, on another occasion, the location of the den was initially located from the air and then visually confirmed on the ground. Because of a high cost factor and the distance to the nearest airport, we made limited use of aircraft in our tracking operations.

RESULTS

Den Site Selection

The dens of six different grizzlies were located, some for consecutive seasons. Thus, 11 active ones were found and information was obtained on site preference, den size, and construction. All dens used by grizzlies were located while they were being constructed, or when bears entered them for their winter sleep.

Information on den site selection (Table 4) was obtained from monitoring and observing instrumented grizzlies in the fall of the year. In 1961 and 1962, we were unable to track the radio-tagged bears to their dens. However, the dates of hibernation (Oct. 29 and Oct. 21-22, respectively) were obtained by observing movements of grizzlies during snowstorms and the lack of tracks thereafter. Later, with improved equipment, tracking grizzlies became routine, and we obtained specific dates when they entered dens to remain for the winter (Table 5).

TABLE 4.--CHARACTERISTICS OF ACTIVE GRIZZLY BEAR DENS

Designation of Grizzly No.	Sex	Year Den Used	Den Location	Vegetation Type	Soil Structure	Den Elevation (Feet)	Species of Den Tree	Den Measurements (inches) Chamber L	W	Ht	Entrance L	W	Ht	Total Length	Den Lining	Fate of Den First Spring
164	F	1963*	Upper Alum Creek	Lodgepole Pine	Soft earth	8,200	Lodgepole	59	53	48	60	17	40	119	Conifer boughs	Remained intact
158	M	1964	Upper Trout Creek	Lodgepole Pine	Packed soil Gravel layer	8,400	Spruce	64	60	60	32	30	42	96	Conifer boughs	Remained intact
40	F	1964	Upper Alum Creek	Lodgepole Pine Spruce-Fir	Packed soil	8,200	Spruce	48	42	48	36	30	30	84	Conifer boughs	Collapsed
40	F(3)	1965	Upper Alum Creek Beach Lake	Lodgepole Pine	Packed soil	8,200	None	54	54	36	66	33	21	120	Grass Moss Rootlets	Remained intact
40	F	1966	Lower Trout Creek	Lodgepole Pine Spruce-Fir	Loose soil	8,000	Dead stump	60	85	28	30	17	20	90	Conifer boughs	Collapsed
202	M	1965	Yellow-stone Canyon	Spruce-Fir	Rocky (talus)	7,800	Log (1)	47	43	26	--	--	--	66	Conifer boughs	Remained intact
202	M	1966	Yellow-stone Canyon	Spruce-Fir	Rocky (talus)	7,800	Log	43	37	28	--	--	--	63	Conifer boughs	Collapsed
101	F	1966	Lower Trout Creek	Lodgepole Pine	Sandy soil	8,000	Whitebark Pine	54	48	30	12	14	36	66	None (2)	Remained intact
101	F	1967	Hedges Peak	Spruce-Fir Whitebark Pine	Packed soil Rocks	9,200	Dead spruce	63	56	40	45	15	54	108	Fir boughs	Collapsed
187	F	1967	Ice Lake	Lodgepole Pine	Packed soil	8,100	Whitebark Pine	--	--	--	36	21	27	--	None (2)	Collapsed
40	F	1968	Upper Trout Creek	Spruce-Fir	Packed soil	8,200	Spruce	68	54	30	38	24	--	106	Conifer boughs	Remained intact

(1) Attempted earlier to dig den at base of tree.
(2) Den abandoned before lining.
(3) Female pregnant.
* Signs of use the previous year.

TABLE 5.--DATA RELATED TO PREHIBERNATION BEHAVIOR OF GRIZZLIES

Designation of Grizzly No.	Sex	Age	First Recorded Den Digging	Final Movement to or Toward Den Area				Entering Den			
				Date	Weather Conditions	Temp. °F. Max.	Min.	Date	Weather Conditions	Temp. °F. Max.	Min.
164	Young, adult female	--	--	1963 November 4	Snowing, 4-6 inches on ground	36	28	November 5	Snow storm	31	16
150	Adult female with 3 cubs	--	--	1963 November 4	Snowing, 4-6 inches on ground	36	28	November 4	Snow storm	36	28
40	Female with cub	6-1/2	September 8 (2)	1964 November 1	Snowing, 12-18 inches on ground	45	32	November 10	Snow storm	40	24
158	Male yearling with 2 litter mates and adult	1-1/2	--	1964 October 29-30	Snowing, 12-18 inches on ground	58	38	November 10	Snow storm	40	24
40	Adult, pregnant female	7-1/2	September 3	1965 October 15-16	Snowing, 3-4 inches new snow	54 41	30 30	November 11	Snow storm	43	28
202	Weaned yearling male	1-1/2	October 27-29 No previous preparation	1965 October 15 Started moving	Snowing, 3-4 inches new snow	54	30				
				October 25-26 Completed move	No snow Clear	55 63	26 25	November 11	Snow storm	43	28
88	Weaned yearling male	1-1/2	After October 15	1965 October 15	Snowing, 3-4 inches new snow	54	30	Probably November 11	Snow storm	43	28
40	Adult female with 2 cubs	8-1/2	November 2-15 Some digging	1966 November 15	Snowing, 12 inches snow on ground	40	20	November 21	Snow storm	38	26
202	Young male	2-1/2	October 10-11	1966 November 6	Snowing, 5 inches snow on ground	38	29	November 21	Snow storm	38	26
101	Adult female with 1 cub	9-1/2	Some digging November 8	1966 November 14	Snowing, 10-12 inches snow on ground	45	24	Probably (1) November 21	Snow storm	38	26
120	Adult female	--	--	1966 About November 1	Snowing. Snow on ground	40	6	Probably November 21	Snow storm	38	26
187	Adult pregnant female	4-1/2	September 16	1967 October 27	Snowing	51	10	Probably (1) November 19	Snow storm	32	25
101	Adult female; 1 yearling	10-1/2	October 11	1967 October 27	Snowing	51	10	November 2-6 (2)			
101	Adult female; 1 yearling	10-1/2	November 7-11(2)	1967 November 2-6 moved to new den site	Snowing, 10-12 inches snow on ground	51	10	New den November 19	Snow storm	32	25
40	Adult female; 3 cubs	10-1/2	--	1968 November 2-3	Snowing, 10-12 inches snow on ground	--	--	November 3-4	Snow storm	--	--

(1) Den abandoned. New den not located.

(2) Den abandoned. New den located.

Over a 9-year period, these dates when grizzlies entered their dens to remain varied by as much as a month.

Bears of both sexes and several age classes were tracked to dens. These included 1 young adult female (barren), 1 young adult female with her first cub, 2 adult pregnant females, 2 adult females with cubs, and 2 adult females with yearlings (Table 5). Two young males were tracked to their dens, 1 as a weaned yearling and again as a 2-year-old -- the other as a yearling with his mother and 2 littermates. Very large boars were instrumented and tracked to denning areas, but none were successfully tracked to dens. Four dens of one female were located -- 3 of these in consecutive seasons; the dens of 2 other bears for 2 successive seasons (Table 5).

An orphaned grizzly, cub No. 78, was observed up to and soon after emerging from hibernation, evidence that cubs can survive the winter without parental care or guidance.

Grizzlies, whose dens were located, hibernated at altitudes ranging from 7,800 to 9,200 feet (Tables 4 and 6). All dens were located in timbered areas and all but one on northern slopes with the den entrance facing north. Couturier (1954) found that brown bears preferred a den that faced south. A north-facing den entrance appears to be advantageous to the hibernating grizzly in Yellowstone because prevailing southwest winds accumulate snow on northern exposures. The deep snow that accumulates in such locations insulates the den chamber from the extreme ambient air temperatures that may drop as low as -40°F.

TABLE 6.-- CHARACTERISTICS OF INACTIVE GRIZZLY BEAR DENS

Den Location	Vegetation Type	Soil Structure	Den Elevation (Feet)	Species of Den Tree	Den Measurements (Inches) Chamber L W HT	Entrance L W HT	Total Length	Den Lining
Upper Trout Creek	Lodgepole pine	Hard, compacted	8,200	Spruce	43 63 43	64 26 26	107	Conifer boughs
Absaroka Range Mist Creek	Whitebark pine	Rocky	9,000	Whitebark pine	54 60 36	-- -- --	54	Conifer boughs
Lower Trout Creek	Lodgepole pine Spruce-fir	Loose soil	8,000	None	70 52 30	20 27 19	90	Conifer boughs
Yellowstone Canyon (North side)	Douglas-fir	Fine-rock soil	7,600	Matted vegetation	-- 48 --	-- -- --	96	Den collapsed
Ice Lake Area	Lodgepole pine	Packed soil	8,100	Mat of Vaccinium scoparium	-- 30 24	-- -- --	84	Den collapsed
Upper Trout Creek	Spruce-fir	Packed soil	8,200	Spruce	64 38 26	44 45 --	108	Partially collapsed

to -50°F. Also, there is less chance that snow on north slopes will melt during a warm period or winter "chinook". Water trickling into a den would appear to be disturbing and undesirable. Though early spring and late fall sightings revealed that grizzlies den throughout Yellowstone and beyond, all occupied dens were found in the central portion of the Park.

Dens were located relatively far from developed areas or human activity. For example, the winter dens of young male No. 202 were dug among rocks on a 45° talus slope in a nearly inaccessible part of the Yellowstone Canyon. Snow avalanches run down the canyon each spring. Large rocks periodically break from the cliffs and start small rock avalanches that have partly buried or have deeply scarred most of the trees on the slopes below. Small islands of timber have become established between the larger avalanche runs. However, even these do not appear to be a safe place for a bear to hibernate; yet No. 202 dug his dens in such spots. These dens were difficult to approach in summer and extremely hazardous to reach after the first snow.

Grizzlies seem to need and to seek isolation for the 6 months of their deep sleep. In the course of evolution, finding isolated den sites for hibernating would appear to be a factor favoring survival of the species. Primitive man and the American Indian undoubtedly found that grizzlies, lethargic until disturbed, were vulnerable in winter and the odds far more favorable for killing them during winter sleep than during their active period.

Den Construction

Most grizzlies prepared winter dens well in advance of the time they went into hibernation. The earliest recorded den diggings were on 3 and 8 September. The latest occurred 11 and 15 November; the bears completed these dens just in time to enter them for the winter (Table 5). In one of the latter cases, den construction had been delayed because the bear had abandoned her first den. The amount of disturbance needed to cause abandonment of a completed den or one under construction varied considerably with individual grizzlies. While dens were being constructed or occupied, we seldom approached closer than 100 feet, or remained for more than a few minutes. Nevertheless, No. 101 abandoned dens in two consecutive years (1966 and 1967), and No. 187 abandoned her's in late fall of 1967 in spite of these precautions. Measurements and photographs of the interiors of dens were made in the spring after the bears had left.

The den-digging dates shown in Table 5 record when excavating was first detected. The duration of den-digging varied, but usually the major excavation was accomplished within 3-7 days; minor digging activity occurred over a period of weeks. Interrupted radio signals enabled us to determine when bears were digging dens, and we then located and observed them (Craighead 1968). For example, in 1966, No. 202 returned twice to his den and, on each occasion, attenuated signals indicated he was digging; digging was visually confirmed on both occasions.

Natural shelters were not utilized as dens by grizzlies, though matted windfalls and rock caves were available. All the dens we located were dug by grizzlies (Table 4). This is in contrast to the European brown bear which often uses natural shelters (Couturier 1954). Seven of 11 dens (Table 4) were dug at the base of trees; three at the base of stumps or with entrances beneath horizontal logs; one den was in the open. Erickson et al. (1964) found that most black bears dug dens beneath objects (such as logs or stumps) or into hillsides. No mention is made of dens excavated beneath trees. The Yellowstone grizzly frequently digs a den entrance at the base of a tree, and tunnels in through the large downward and outward sloping roots (Figs. 4 and 5). The roots limit the size of the den opening and may form a ceiling. Although grizzlies do not always select the base of a tree for den sites, such sites are preferred. Exceptions were No. 202, who dug his dens under horizontal logs (Fig. 6). However, this young grizzly made several attempts to dig dens at the bases of large trees; apparently he could not remove large rocks and boulders wedged between the roots. No. 40 was also unsuccessful in digging a den at the base of a large fir tree. She never completed the den, perhaps because the space between major roots was 8-10 inches too narrow for a den opening.

We believe it is instinctive for the grizzly to dig a den rather than appropriate or modify a natural cavity; some behavior supports this. For example, in the fall when grizzlies dig dens and gather boughs for beds, they also dig to cover carrion or kills more frequently than at



Fig. 4. Den excavated at base of tree. Roots frequently limit size of the entrance.

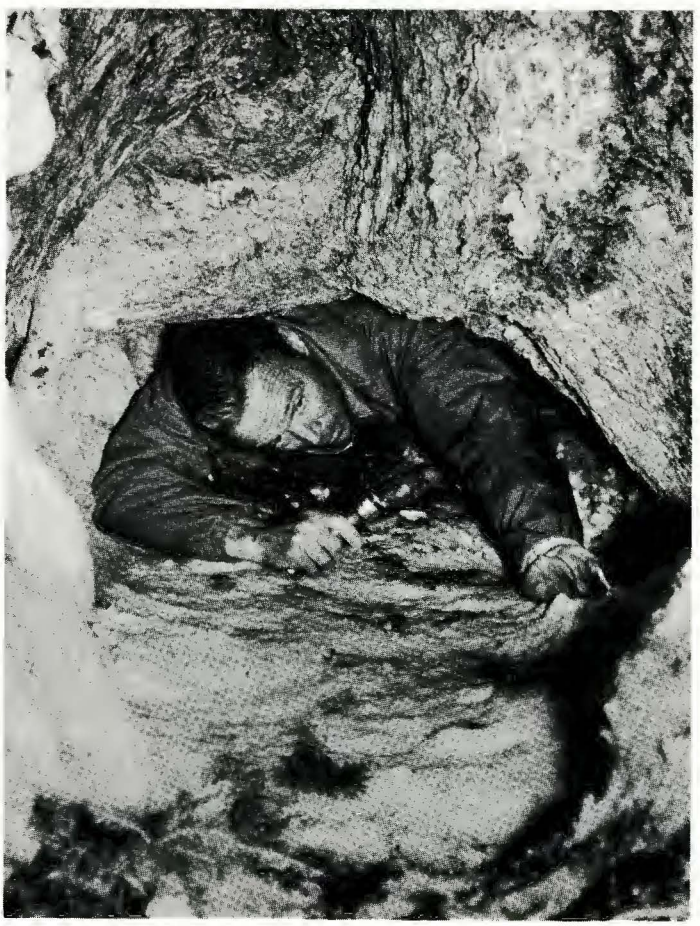

Fig. 5. Nearly vertical den entrance with den chamber lying directly beneath the tree.

other seasons of the year. In addition, when they move to their dens prior to hibernation, they perform a stereotyped "housecleaning" by digging inside and outside the den. This seasonal increase in digging may reflect a biological drive. The fact that some den digging occurs long before the grizzlies enter their dens for winter and at a time when there is no immediate need for a den suggests that this behavior may be triggered by hormonal changes (Fig. 7).

Dens of grizzlies were just adequate for the number of bears sheltered, whether an individual or a family. Females with cubs as well as females with yearlings slept in the same den in close contact with their offspring. The dens were usually constructed with an entrance way leading into the bed chamber (Fig. 8). The average size of this chamber (determined from 10 dens) was: 56 x 53 x 37 inches. A den which sheltered No. 39 and her 3 yearlings was almost as wide as it was long. In 1966 when No. 40 hibernated with 2 cubs, her den was wider than it was long, and the 3 bears slept curled side by side (Table 4). Females with cubs or yearlings dig wider dens than bears that hibernate alone. Den entrances went directly into the chamber, or had entrance tunnels as long as 66 inches. Width of den openings varied from 14 to 33 inches and averaged 22; heights ranged from 20 to 54 inches and averaged 34. Den openings impressed us as being small for the size of the animals using them. In some instances, it appeared that even a medium-sized bear would have had difficulty squeezing through the opening to the chamber. Length of bed chambers and the entranceways combined averaged 92 inches. The



Fig. 6. Den constructed under a horizontal log on a steep talus slope. The first den of grizzly No. 202.



Fig. 7. Female No. 40, in lethargic condition, moving to den. Dens were located in 1964, 1965, 1966, and 1968.

small size of these chambers is functional, i.e., body heat from the bears substantially modify den ambient temperatures (Craighead et al. in press). Dens never contained more than 1 chamber; alcoves, such as those reported for the polar bear (Harrington 1968), were not observed.

After we located active dens by radiotracking grizzlies, a general pattern of den site preference emerged which enabled us to seek for and find dens used in previous years. The size and characteristics of six such dens are shown in Table 6. These were constructed by unmarked grizzlies and were not in current use. Inactive dens, like active ones, were on north-facing slopes, in dense timber, in secluded areas, and in five of six instances, were dug at the base of large trees. The average bed chamber measurements of 52 x 50 x 39 inches are similar to those of active dens. The greatest length of a den chamber and entranceway was 108 inches (Table 6). A natural rock cave located in Yellowstone Canyon at 7,800 feet measured 87 inches long and had a den chamber 33 x 57 x 36 inches, and was lined with boughs. It appeared suitable for a den, but was not used and probably served only as a day bed.

Den Environment

Den beds were usually composed of spruce or fir boughs, 3 to 14 inches deep (Fig. 9). Normally boughs were chewed from spruce or fir trees growing within a radius of 50 feet of the den. During three winters when female No. 40 was not pregnant, she used conifer boughs, but when



Fig. 8. Den entranceway excavated through obstructing roots which were chewed off by bear. Photographer was in den chamber and observer outside looking in.



Fig. 9. Den lined with conifer boughs. Linings in different dens varied from 3-14 inches. When grizzlies emerged from hibernation some did not disturb the bed; others raked the bedding material out of the den.

pregnant, she prepared a bed of moss and grass. Pregnant females may routinely use fine, soft material for beds. Dens are usually lined soon after they are dug, but in one case, a grizzly accumulated a large pile of boughs prior to bed construction and left them outside the den entrance. The bough bed prepared by grizzly No. 202 was circular with a cuplike depression (Fig. 6). The diameter across the top of the depression was 31 inches. When measured following winter use, the bed was 12 inches deep. It was probably 16-18 inches deep when first constructed. From the size of the bear and the den, we inferred that the yearling slept with his head and shoulders protected but the rest of his body exposed.

All dens were situated where the entranceways would fill with snow, forming a sealed chamber with little transfer of air (Fig. 10). Occasionally a bed was elevated above the entranceway; this created a heat trap that prevented the air warmed by the bear's body from escaping before snow filled the entrance (Fig. 11). We do not know whether a den of this type is constructed accidentally or is the result of instinctive or learned behavior. However, it may be instinctive for grizzlies to construct a heat trap when conditions for doing so are favorable. The den of the grizzly bear is a very localized environment with temperatures warmer and more constant than those existing outside. In addition, when a deep insulating layer of boughs is used, many "dead air" pockets form a microclimate next to the bear within the porous, bedding material. Here, the temperature is considerably warmer than the

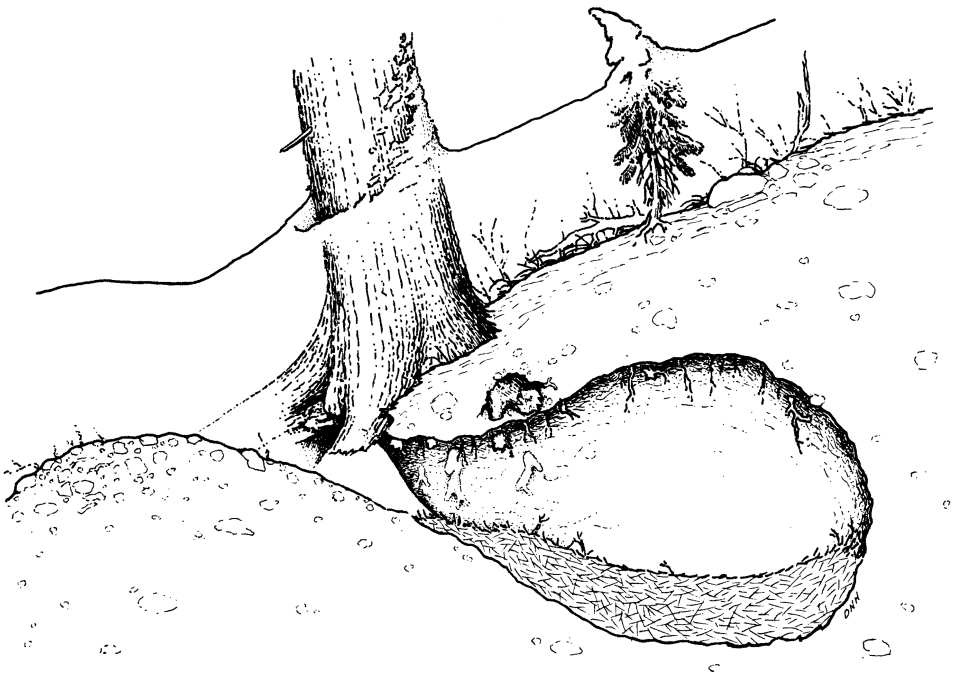

Fig. 10. Den with bed lower than entrance. Such dens were covered with five to ten feet of snow.



Fig. 11. Den constructed so the bed lay slightly above the entrance; this helped to provide a constant den temperature by forming a dead-air space that functioned as a heat trap until deep snow sealed the den entrance.

general ambient temperature of the den chamber. Thus, a very narrow "envelope" of bedding and air lies between a bear and its den.

The temperature of such a microclimate in a black bear den was recorded by placing a thermistor probe from a body temperature transmitter between the bear and his bed of dry pine needles and finely shredded twigs and rootlets (Craighead and Craighead 1966). The maximum recorded temperature for the microclimate of 97°F. ± 2°F. closely approached the body temperature of 101°F. recorded for an active bear in summer, and exceeded the average rectal temperature (96°F.) of a hibernating black bear which was monitored for 4 days (Craighead et al. in Press). However, over a 55 minute period the temperature fluctuated between 97°F.and 83°F. The maximum temperature of 97°F. occurred when the temperature sensor was against the bear's body, perhaps where his fur was thin and heat conduction was efficient. The bear was awake and moving within the den. Thus, at this time his body temperature was probably close to 100°F. The thin layer of dead air and bedding between the bear and his den enveloped approximately 3/4 of the bear's body surface when he was curled in repose. The insulated bed was 30 inches in diameter, 18 inches deep and cuplike, with nearly perpendicular walls which fitted the bear snugly and minimized temperature changes (Fig. 12). Bed materials differed from those used by grizzlies, but the dimensions and structure of the bed were similar to those prepared by yearling grizzly No. 202. Our observations of both black and grizzly bears in their dens have shown considerable variation among individual animals in



Fig. 12. Black Bear Den
A natural cave with a bed 18" deep and 30" in diameter.

degree of lethargy. The microclimatic temperatures surrounding a black or grizzly bear in winter sleep are governed by the temperature of the bear, the temperature of the den wall, and the insulating qualities of the bedding material. The dormancy temperature may, in turn, be influenced by the temperature of the microclimate enveloping the animal. Thus, winter dormancy and the degree of lethargy of wild bears may show individual variation directly related to the microclimatic temperatures.

Distances Traveled to Den Sites

Distances traveled by instrumented grizzlies moving to their dens or den sites from fall or summer foraging areas varied from 2.5 to over 30 airline miles (Table 7).

Observations of color-marked grizzlies, made when they dispersed to den sites in the fall, revealed that some grizzlies traveled even greater distances than did those we were able to track by radio. Some traveled beyond the boundaries of Yellowstone National Park.

Distinctions Between Daybeds and Dens

In the Yellowstone region, most grizzlies are active both day and night during the early spring months when food is relatively scarce. They are again similarly active during the fall of the year when they forage prior to entering dens for the winter. In summer, they rest during daylight hours and forage at night. They seek windfalls and dense thickets of spruce, fir, and lodgepole pine in which to rest. Here they

TABLE 7.--DISTANCES GRIZZLIES TRAVELED FROM FALL OR SUMMER FORAGING AREAS TO DEN SITES

Grizzly Number	Airline Distance Traveled
40	5.1
40	5.5
40	5.5
40	6.8
101	2.5
101	11
202	8
202	8
187	11
39	5
14	16
164	14
7	14
34	16+
150	6
96	30+
76	21+

excavate daytime beds or lairs, most of which vary in depth from 1 to 18 inches. Forest duff is often scraped to mineral soil. Occasionally daybeds, like winter beds, are lined with grass, pine needles or other vegetation. Most beds are shallow excavations, but at times denlike burrows are dug 3 or 4 feet into slopes or under fallen logs; these burrows are cooler than surface beds.

Burrow-type daybeds can be mistaken for winter dens, and occasionally a den such as that of No. 202 can resemble a daybed (Fig. 6). However, daybeds are usually located relatively close to feeding areas, may be visited and used by different bears, and they are not necessarily constructed into north-facing slopes nor at the base of large trees. They may function as retreats during the breeding season. In 1964, a large boar and a female in estrus were located in daybeds 25 feet apart. The female had dug a burrow several feet into a hillside. With her body in the burrow and her head and muzzle resting on the tailings from the cave, she could discourage unsolicited attentions from the male. Daybeds, used during the pre- and post-hibernating periods are normally clustered around a den, but even the most elaborate of these are easily distinguished from the den itself.

Relation of Den Site to Home Range

Two types of grizzly bear home ranges were plotted and delineated by radiotracking. One was a distinct, well-defined area used throughout the year. The other type of home range consisted of a summer and early

fall foraging area, connected by a migratory corridor to an early-spring and late-fall area that contained the den. The home range of an animal provides all the essentials of life, and thus by definition, includes its den site. Den site selection and prehibernation behavior influence range size and pattern, and conversely, home range characteristics affect the choice of a den location.

We observed some interesting prehibernation behavior, related to home ranges, while radiotracking grizzlies. During the fall of 1965, No. 202 was closely monitored. On 25 October, he left his regular summer range, swam the Yellowstone River, and traveled directly north and then east to a site in Yellowstone Canyon where he subsequently dug his den (Fig. 13). When he crossed the Yellowstone River, this weaned yearling left the summer range he had inhabited. Except during his spring move from the natal den and his return the ensuing fall, this young bear had spent his entire life in the immediate vicinity of Hayden Valley. He dug his first den within a few days of selecting the site (Fig. 6). It was within the known home range of his color-marked mother, female No. 65; her home range had been determined by observation over a period of years.

In comparison to No. 202, No. 188, a weaned grizzly, also established a summer range within the home range of his mother, female No. 40. This yearling had also spent all his life within the home range of his mother. We thought he might hibernate within this familiar territory, but during a snowstorm in late October, we followed him into new and distant terrain; apparently he was seeking a hibernation site. He

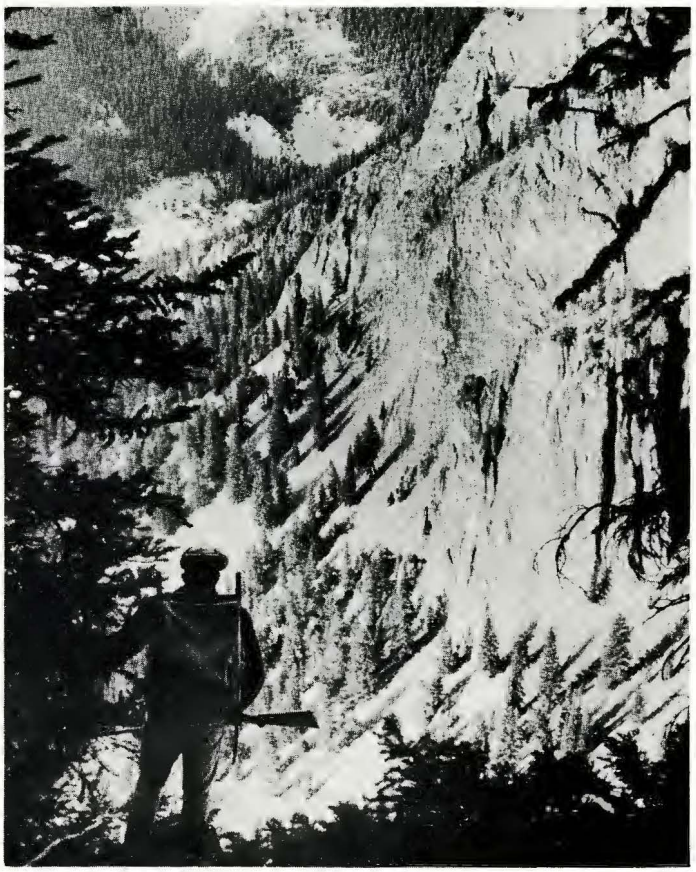

Fig. 13. Denning area of yearling grizzly No. 202 in the canyon of the the Yellowstone River in 1965. In spite of the rocky terrain, the den was completely excavated by the animal. Isolation provided by the canyon in this case, and by remote timbered areas in other instances were characteristic of denning areas.



Fig. 14. Observer standing in entranceway to show steep slope of entrance to den which had an elevated bed chamber and heat trap. Note excavated soil in right-hand, lower corner of photograph.

outtraveled us in the storm; we lost his signal and were unable to pick it up again. From observations made in later years, we determined that he established a home range consisting of a summer range with a migratory corridor to a fall range where he denned. Thus, his home range was very different from that of his mother. Such prehibernation dispersion during the fall by young grizzlies, disassociated from parental protection, is a common occurrence. At this time, they establish a home range and adjust to an independent life.

Re-use of Dens

Old bedding material found in a debris pile at the den where No. 164 wintered during 1963 suggested that this den might have been used the previous year (Fig. 14). Grizzlies No. 40 (1966) and No. 101 (1967) raked the bedding out of their dens before leaving them in spring. This suggested that they would re-use them; however, these dens and others to which we radiotracked grizzlies were never re-used. Five dens collapsed when the soil became saturated with water in late spring, and thus were not suitable for re-use (Fig. 15); however, six remained intact (Table 4) and could have been reoccupied, but were not.

In 2 consecutive years, grizzly No. 202 dug two dens only 300 feet apart. His first den was poorly excavated and probably inadequate for re-use the following year. The second-year den was a decided improvement; the grizzly removed an estimated ton of rock in preparing it. Although we believe that the biological drive to dig a den is instinctive,

a learning process is involved, and den construction improves with experience. Near many active den sites, we found evidence of former dens (Fig. 15). Three collapsed dens were located very close to the active den of grizzly No. 164. A collapsed den within a few hundred feet of the den of No. 40 (1966) had plant growth on the debris pile indicating that it was at least 5-7 years old. It could possibly have been constructed by No. 40, but more likely had been constructed by another bear. We had other indirect evidence of the use of a denning area by more than one bear, but never did two animals dig separate dens in the same area in the same season. Possibly the characteristics of a good denning area are recognized by bears and the site attracts the same bear for a number of years or other bears at different times.

We found no evidence that any of the animals we radiotracked to dens died during the winter. Nevertheless, we suspect that old bears may die in or near their dens, because we made a number of observations of very old, color-marked bears in the fall that were never again observed.

Prehibernation Movement and Behavior

In the early years of the study (1960-61), we observed that grizzlies moved to their dens during a snowstorm and that tracks were not visible anywhere in the area after the storm. This suggested that certain environmental stimuli may have triggered all or most of the grizzlies to move to and enter their dens simultaneously. Through radiotracking, we learned that some bears dug dens long before they were ready to hibernate.

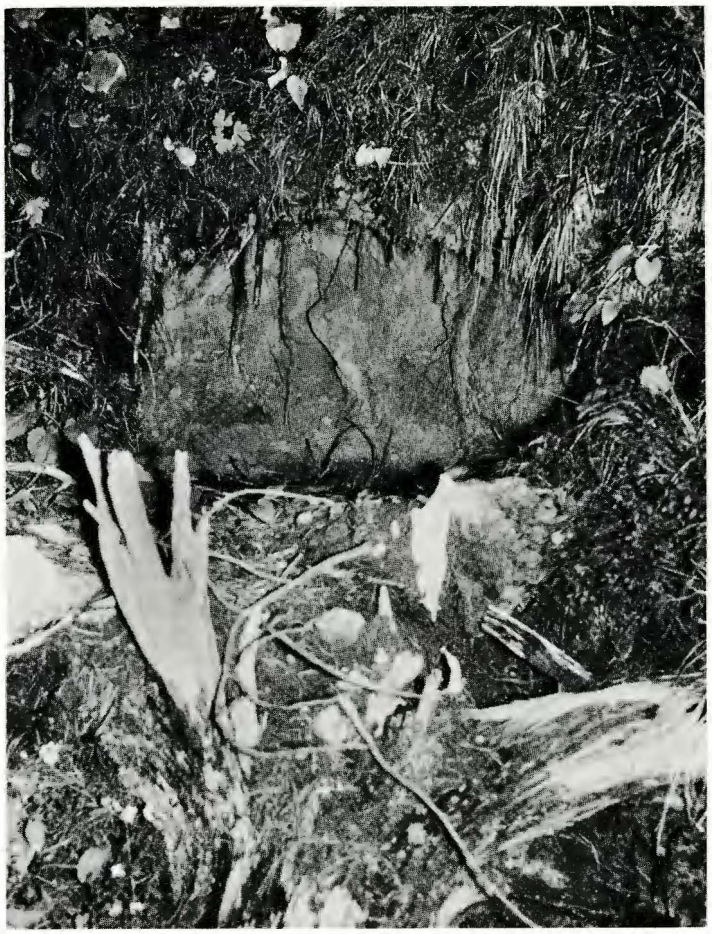

Fig. 15. A den which caved in after use. This and similar dens were found in the vicinity of a new den dug by grizzly No. 164. This may indicate the return of this bear to a specific area to den, or the attraction of other bears to a "prime" denning area in previous years.



Fig. 16. Bough bed constructed on the snow in March several hundred feet from the winter den. Female No. 40 and her offspring used these beds for several weeks before leaving the area of their den. Other bears did not construct such beds.

They periodically returned to these dens and enlarged them following early season snowstorms. If a period of warm weather followed, grizzlies usually returned to their fall foraging areas until another storm sent them denward again. However, in some cases, they moved to their dens during snowstorms and remained there until a subsequent snowfall and low temperatures put them in for the winter. In 1961 and 1963, all the grizzlies we had under observation moved directly from fall foraging areas during a snowstorm and entered their dens for the winter (Table 5).

On the clear and mild morning of 15 October 1965, the barometric pressure began to fall, and No. 40 started to move. By late afternoon, a severe snowstorm was in progress, and we radiotracked her to the den. This and similar behavior of other grizzlies suggest that they may be able to detect approaching storms, possibly by variations in barometric pressure or through sensitivity to infrasonic waves (Green and Dunn 1968). Some such stimuli appear to initiate movements to dens before storm signs are visually apparent.

Grizzlies living under the same environmental conditions entered their dens at the same time during a storm regardless of whether they were waiting close to their dens (the case of No. 40 in 1965) or were foraging at some distance. At the time of entering dens, minimum ambient air temperatures as well as maximum temperatures in shaded den sites were below the freezing level. From 1963 through 1968, we never found tracks throughout extensive areas where grizzlies had been roaming and foraging prior to the storms that put them in their dens. The nearly simultaneous

entering of dens during falling snow conceals tracks that could reveal the den locations. This behavior may have survival value for the species. However, black bears in Yellowstone generally enter dens earlier in the season, and their dates of entry are varied. In 1966 black bear No. 1 entered its den on 3 October, and an unmarked bear entered its on 6 November. In 1967, No. 1 entered 2 October, and No. 3, 29 October. In 1968, No. 5 entered 26 October, and No. 1, 9 September. The signal from No. 1 was lost, so it is possible that the bear did not remain in the den at this early date. However, the bear was not observed again during the fall of 1968. During a snowstorm on 15 October 1965, No. 202, a weaned yearling grizzly, left his summer and early fall foraging area and moved 4.5 airline miles into new territory where he foraged and appeared to be seeking a den site. He remained there until 25-26 October when he moved 12.5 miles during clear weather and started digging what was to become his den (Table 5). This is the only instrumented grizzly whose final move to a den was not made during a snowstorm. However, No. 202 did not enter his den for the winter until a major snowstorm arrived on 11 November.

In 1961, the grizzlies hibernated on 21 October, the earliest date recorded. Snow and low temperatures occurred early in the fall and continued with few breaks until the bears hibernated. The first snowfall of 3-4 inches occurred on 11 September and was followed by another snowfall of 4-5 inches on 18 September. The average minimum temperature for September was 29°F., and the average maximum, 51°F. The

October 1961 average minimum and maximum temperatures were 22°F. and 45°F. It is perhaps significant that the most "wintery" fall period coincided with the earliest hibernation date.

A combination of low temperatures and snowstorms appears to condition the bears and eventually influence the time at which they enter their dens. A convenient food supply, little snow, and relatively high ambient air temperatures tend to delay hibernation. On the other hand, available food will not deter bears from entering their dens if snow is accumulating on the ground and snowstorms and severe cold occur at the same time. In the cold fall of 1961, when the grizzlies hibernated during a snowstorm on 21-22 October, the whitebark and limber pines produced very few nuts and the meadow mouse (Microtus sp.) population was low. In general, food was probably less abundant than in most other years. However, in October, a number of marked and unmarked grizzlies feeding on an elk carcass in Hayden Valley abandoned this food supply and moved to their dens during a snowstorm.

In 1966, with snow on the ground, grizzlies No. 40 and No. 101 and their families left their den sites and visited the sparse remains of a bison carcass. This food supply, within a relatively short distance of the two dens, apparently influenced the prehibernation behavior of these animals. We expected them to remain within a hundred yards of their dens as other grizzlies had done, but instead, they daily moved a mile or more to the carcass and back to their dens, leaving well-worn trails. However, when a severe snowstorm occurred on 21 November, both

families entered dens for the winter.

Over a 9-year period, the onset of hibernation varied by as much as a month. It therefore appears that change in light as winter approaches is not a factor influencing the exact time of hibernation for grizzly bears. Hock (1955), working with Citellus undulatus and studying the different climatic and ecological factors that may influence hibernation, found no relationship between the beginning of hibernation and the temperature, snowfalls, or the availability of food. The only close correlation he observed was between illumination and hibernation. Thus, the "triggering mechanism" to initiate hibernation may be different in ecological and physiological hibernators.

During the summer of 1966, instrumented grizzly No. 40 and her two cubs established a close relationship with female No. 101 and her cub. This close relationship extended throughout the summer and continued until the families entered separate dens. The association appeared to have altered their normal denning behavior. Instead of returning to her former hibernation site near upper Alum Creek, No. 40 dug her den near upper Trout Creek; her den was only 1.5 miles from the den of No. 101 (Table 4). The usual denning areas of these two females were approximately 16 airline miles apart. Instead of remaining close to their dens, the two families visited back and forth between dens and appeared reluctant to terminate the summer relationship. The prehibernation behavior of these bears was contrary to that observed in all other grizzlies, who sought solitude for themselves and families. The

relationship, however, provided greater security for the young of both families and was continued, though modified, the following spring when No. 40 weaned her yearlings and bred, while No. 101 kept her yearling and adopted the 2 yearlings weaned by No. 40. Such a practice would tend to increase productivity by allowing one of the two females to come in estrus a year sooner than otherwise possible. It also benefits the survival of yearlings, a relatively vulnerable age class.

Prehibernation Lethargy

In the late fall of 1965, we noticed a distinct lethargy in all grizzlies closely observed prior to hibernation. For example, on 14 October, we found instrumented grizzly No. 188 in a daybed. As we approached, he moved away slowly but soon stopped and sat down. Within a few minutes, his head began to sway, and he slumped forward with his muzzle on the ground turned inward under his body. Although aware of our presence, he could not remain awake and alert. He made a number of attempts to raise his head and rise from his sitting posture, only to slouch forward with his muzzle tucked between his legs. We moved to within 100 feet before he rose and lumbered off. Similar behavior occurred when we observed instrumented grizzly No. 202 on the same day.

About 2 weeks later on 3 November, lethargy was even more pronounced. No. 202's radio signal led us to the edge of the Yellowstone Canyon. A 3-bearing fix placed the grizzly directly below us. While we scanned the terrain with binoculars, the crash of a dislodged rock brought

a roar from the grizzly lying just below. For a half hour he remained nearly motionless in a sitting-fetal posture. He appeared to be in advanced lethargy and apparently never detected us.

On 25 October 1965, we approached to within 30 feet of No. 40 in her den. She was sufficiently lethargic that our presence did not disturb her. In this condition, she either stayed close to her den or within it. This behavior continued until 11 November, when she entered the den during a snowstorm to remain for the winter. She had moved to her den site a full month before finally denning for the winter. We suspect that early onset of lethargy influenced this movement.

The lethargic condition of these bears during the fall of 1965 was comparable to the condition of lethargy that they normally attained after entering their dens to winter.

Eisentraut (1960) noted that, with protracted exposure to cold, the higher, warm-blooded animals can go below the lower threshold of activity and a hypothermic lethargy ensues. This did not appear to be the case with the grizzlies under observation. During previous fall periods with more prolonged cold, they did not exhibit lethargy prior to entering dens.

Quite possibly weather conditions in the fall of 1965 initiated lethargy early in the season and affected grizzly prehibernation behavior, and movement to den sites. An early fall period of snow and unusual cold occurred from 15 through 28 September. The minimum temperature for the 18-20 September cold spell was 7°F. This was the earliest period

of snow and low temperatures experienced in the course of the study. Ambient air temperatures were lower than at the November 1965 time of hibernation (Table 5). Four to 6 inches of snow covered the ground in the central portion of the Park, and snow was deeper at higher elevations. This cold spell was followed by warm, mild fall weather. The combination of early snow and low temperatures did not stimulate grizzlies to hibernate, but it did disperse some from summer to fall foraging areas, and appears to have been a factor triggering hibernation processes so that the bears became lethargic and physiologically ready to hibernate by late October, before the usual environmental stimulus of a "final" snowstorm caused them to enter their dens for the winter on 11 November. Although lethargy occurred earlier than in other seasons, the grizzlies did not enter and remain in their dens until the 11 November date.

Defense of Dens

Information obtained with and without the use of radios indicate that the Yellowstone grizzlies are not territorial. On a number of occasions we have observed more than 20 grizzlies at one carcass feeding together with surprisingly little friction. We have never observed the defense of a home range or compensatory movements (Craighead and Craighead 1956) or mutual avoidance (Hornocker 1970). We thought that if grizzlies defended specific areas, these areas most likely would be in the vicinity of their winter dens. Here they might also attack a man. However, we observed no overt defense of a den or den area against either

man or other grizzlies. On one occasion when we were very close to the den of No. 158, our radio signal indicated that she and her family were moving toward us through dense, "doghair", lodgepole pine. Immediately after climbing trees, our signal revealed that the grizzlies were running away; apparently they had detected us.

In the fall of 1967, we approached to within 200 feet of the den of grizzly No. 101. The radio signal showed she was inside. We moved on without disturbing her. Several hours later we returned and saw fresh bear tracks leaving the den and got a faint signal on our radio receiver. We followed the tracks for a half mile through knee-deep snow. Signs showed us that, after leaving the den, No. 101 crossed our trail. When she did so, she started running and urinating and the urine trail persisted for about 200 yards. We interpreted this as a physiological manifestation of fright. The female abandoned the den. Later in the season when her newly dug second den (Table 5) was approached, she growled threateningly, came out of the den, and retreated a short distance. We observed similar behavior at the dens of grizzlies No. 40, 164, 202, and 187.

Visits to Dens During Winter Sleep

On 28 December 1966, we visited the den of grizzly No. 40 and her two cubs of the year. The den was located on a steep slope, and we had to approach it from below on snowshoes. We could see that the den entrance was still open and that there were no signs to indicate the bears

had left the den since entering in November. While one man stood guard, the other slid head first down the inclined entranceway so he could peer into the den chamber. In this awkward position, he was approximately 5 feet from the sleeping female and her two grown cubs. All three grizzlies were lethargic and sleeping, but apparently the female detected our presence for she growled and shifted her position. We took some flash pictures and then quickly retreated. Although this aroused the grizzlies, they were sufficiently lethargic that they did not come out of the den, during the short period of time we were present, nor did they later abandon it.

The Yellowstone grizzly mates in June and early July, but a delay in implantation postpones embryonic development. The blastocysts probably implant between 15-30 December, about a month after the sows enter their dens (Craighead et al. 1969). Parturition occurs in late January or in February, but we have been unable to obtain specific dates. Radiotelemetry can, in the future, provide information on the length of the delay period and physiological parameters of parturition.

No feces or traces of urine have been found in recently abandoned grizzly bear dens, or even observed close to them. Harrington (1968) found that polar bears usually keep their dens clean; only traces of urine and minute fecal fragments were found in six of nine dens he examined. We have found neither feces nor urine in six, active, black bear dens visited while the bears were in winter sleep. Three dens were examined after immobilizing and removing the bears; all six dens

were inspected in the spring after the animals left. We observed black watery excrement, passed by grizzlies prior to entering winter dens; this suggests a scouring and cleaning of the alimentary tract. The Yellowstone grizzlies normally fast from the time they enter their dens until they leave them in the spring.

Occasionally a grizzly emerges from its den in midwinter. One, in the Old Faithful area, came out in the latter part of February 1967 and was observed on the carcass of an elk that had either been killed or had died in the vicinity of the den.

Emergence From Hibernation

Bough and bark beds laid on the snow near the den of grizzly No. 40 and her yearlings in 1965 (Fig. 16) indicated that they had emerged from the den in late March but did not leave the den area until about 20 April. The beds were on different snow strata or levels, indicating time intervals between construction. Close examination of the beds showed that the bears must have slept on them and been covered by snow from subsequent storms. As the snow piled up over the sleeping animals, their breathing produced air shafts to the surface. In 1967, No. 40 emerged from hibernation with another family of yearlings but on this occasion left the den area without building bough beds. Other grizzlies emerged from dens 3 to 4 weeks before they left their den sites. When grizzlies first emerge, the snow is frequently too soft and deep for them to travel, and they remain at the dens until warm, sunny

days, followed by chilly nights, crust the snow so it will support their weight.

Grizzlies may be induced to emerge from dens before they can travel because air temperatures in early spring, during the day, are often warmer than those within the den. At 10:45 A.M. on 28 April 1965, the air temperature inside the den of No. 40 was 32°F. The air temperature in the shade, outside of the den and 3 feet above the snow, was 40°F. The ambient air temperature in the sun was 50°F.

Our observations reveal that mature male and female grizzlies tend to leave den areas earlier than females with yearlings. Females with cubs of the year are the last to leave den sites and some may remain in the vicinity of the den until the snow has disappeared.

The carcasses of winter-killed animals form a considerable portion of the diet of grizzly bears in early spring. In addition, grizzlies kill those weakened by a severe winter. Our records include observations and authentic reports of grizzlies killing full-grown moose, bison, and elk. In most cases the animals were attacked in deep snow, while crossing rivers, or when otherwise handicapped or incapacitated. Some were so close to death from malnutrition that they made no attempts to evade attack. We have a number of sight records (our own and others) of two or more grizzlies pursuing and killing elk in well-coordinated attacks. The majority of elk and bison carcasses that were utilized by grizzlies were in advanced stages of malnutrition as evidenced by bone marrow tests. The same was true of

most of those that fell prey to bears (Craighead and Craighead unpub.).

A late spring with deep snow on the ground, such as occurred in 1970, can produce a higher than normal number of starving ungulates which fall prey to hungry grizzlies. Such predation is atypical, and the fundamental cause of death is malnutrition, not predation.

Our observations indicate that the grizzly's role as a carnivore, prior to and immediately after hibernation, in Yellowstone is first a scavenger, second a predator on small prey species (especially when these are at high densities), and last, a killer of large prey animals.

Summary

Over a 9-year period, grizzly bears were studied by means of radiotracking. Eleven active dens were located. Den selection and digging may occur as early as 3 September. Dens were dug entirely by the grizzlies, and no natural shelters were utilized. Dens were not large, and all bed chambers were lined with boughs. Dens located by radio were not reused, but circumstantial evidence suggested occasional re-use. It appears that den digging is instinctive behavior for the grizzly, and is reinforced by experience. Grizzlies traveled from fall foraging areas to den sites over distances varying from a few miles to 30 or more. Each year, grizzlies living under the same environmental conditions hibernated at about the same time. The dates when grizzlies entered dens for their winter sleep were influenced by environmental factors and, during 9 years, varied by as much as a month.

The bears entered their dens during snowstorms. This eliminates tracks and appears to have survival value for the species by protecting and isolating the grizzly during the period of its life when it is most vulnerable to man.

In the fall of 1965, a prehibernation lethargy was observed in grizzlies prior to entering their dens. This premature onset of lethargy appeared to have been activated by an unusually cold spell in September. When grizzlies emerge from winter sleep, winter-killed ungulates are major items in their diet.

Literature Cited

Anonymous. 1959. U. S. Dept. of Commerce. Weather Bureau in Cooperation with National Park Service. Climatography of the U. S. (Summary) No. 20-48. 2 pp.

_____. 1970. U. S. Dept. of Interior Annual Wildlife Report. Wildl. Population Figures, Yellowstone National Park, Wyo. 3 pp.

Baggley, H. A. and W. B. McDougall. 1956. The plants of Yellowstone National Park. Yellowstone Library Museum and Assoc. and Wheelwright Lithographing Co. 186 pp.

Couturier, M. A. J. 1954. L'ours Brun, Chapter 16 Gite, Tanieke Sommeil Hivernal, Grenoble, France. 904 pp.

Craighead, F. C., Jr. 1968. Radiotracking of Grizzly Bears in Yellowstone National Park. National Geographic Society Research Reports. 1963 Projects. Pp. 59-67.

_____ and J. J. Craighead. 1965. Tracking Grizzly Bears. BioScience 15(2):88-92.

_____ and _____. 1967. Seventh Yellowstone Field Research Expedition. Pub. No. 45. Atmospheric Sciences Research Center, State Univ. of New York at Albany. Pp. 61-71.

_____, _____, and R. S. Davies. 1963. Radiotracking of Grizzly Bears, Biotelemetry. Pergamon Press. Pp. 133-148.

Craighead, J. J. and F. C. Craighead, Jr. 1956. Hawks, Owls and Wildlife. Wildl. Mgmt. Inst. and Stackpole Co. 443 pp.

_____ and _____. 1966. Radiotracking and Telemetering System for Large Western Mammals. Mineo. report. 67 pp.

_____ and _____. 1970. Food habits of Yellowstone Grizzly bears. Unpubl. 35 pp.

_____, M. Hornocker, W. Woodgerd and F. C. Craighead, Jr. 1960. Trapping, immobilizing and color-marking grizzly bears. Trans. N. Am. Wildl. Conf. 25:347-363.

_____, _____, and F. C. Craighead, Jr. 1969. Reproductive Biology of Young Female Grizzly Bears. J. Reprod. Fert. Suppl. 6:447-475.

_____, F. C. Craighead, Jr., J. R. Varney, and C. E. Cote. In Press. Satellite Monitoring of Black Bear. BioScience.

Eisentraut, M. 1960. Heat Regulation in Primitive Mammals and in Tropical Species, Mammalian Hibernation edited by Lyman, C. P. and A. R. Dawe. Pp. 31-43.

Erickson, A. W., J. Nellor and G. A. Petrides. 1964. The Black Bear in Michigan. Research Bull. 4, Michigan State Univ., Agric. Exper. Sta. 101 pp.

Folk, E. G., Jr. 1967. Physiological Observations of Subarctic Bears Under Winter Den Conditions. Mammalian Hibernation III edited by Fisher, et al. Pp. 75-85.

Green, J. A. and F. Dunn. 1968. Correlation of Naturally Occurring Infrasonics and Selected Human Behavior. Acoustical Soc. of Am. 44(5):1456-1457.

Harrington, R. C. 1968. Denning Habits of the Polar Bear (Ursus maritimus), Canadian Wildl. Service Report. Series No. 5. 30 pp.

Hock, R. J. 1955. Photoperiod as Stimulus for Onset of Hibernation. Fed. Proc. 14 (1):73-74.

_____. 1960. Seasonal variations in physiologic functions of Arctic ground squirrels and black bears, Mammalian Hibernation, Bull. of the Mus. of Comp. Zool., Harvard College. Pp. 155-171.

Hornocker, M. G. 1970. An Analysis of Mountain Lion Predation Upon Mule Deer and Elk in the Idaho Primitive Area. Wildl. Mono. No. 21. 39 pp.

Kayser, C. 1961. The Physiology of Natural Hibernation. Pergamon Press. 335 pp.

Lyman, C. P., and A. R. Dawe. 1960. Mammalian Hibernation, Bull. Mus. of Comp. Zool., Harvard College, Vol. 124. 549 pp.

Morrison, P. 1960. Some Interrelations Between Weight and Hibernation Function. Mammalian Hibernation, Bull. of the Mus. of Comp. Zool., Harvard College. Pp. 75-91.

Storer, T. I. and L. P. Tevis, Jr. 1955. California Grizzly. Univ. of Calif. Press, Berkeley. 335 pp.

Varney, J. R. 1971. Equipment Design. Final Report, A.E.C. Contract AT(45-1)-1929. 90 pp.

HOME RANGES AND ACTIVITY PATTERNS OF NONMIGRATORY ELK OF THE MADISON DRAINAGE HERD AS DETERMINED BY BIOTELEMETRY

John J. Craighead*
Frank C. Craighead, Jr.**
Robert L. Ruff*
Bart W. O'Gara*

-1971-

* Montana Cooperative Wildlife Research Unit (Bureau of Sport Fisheries and Wildlife, Montana Fish and Game Department, University of Montana, and the Wildlife Management Institute Cooperating).

** State University of New York, Albany, New York. Atmospheric Science Research Center, Environmental Research Institute, Moose, Wyoming.

INTRODUCTION

Elk (Cervus canadensis nelsoni Bailey) of the Madison Drainage herd are members of a widely dispersed population. They inhabit the upper drainage of the Gardiner River, the upper Madison Valley and its tributaries - the Firehole and Gibbon Rivers within Yellowstone National Park. This herd was thought to be nonmigratory since its members summered and wintered in the river valleys. Elk inhabiting these drainages had never been marked and then observed nor had they received even cursory scientific study, so no conclusive evidence existed to support the nonmigratory theory.

One objective of our study was to determine the movements and activities of individuals and segments of this herd of approximately 600 or 700 elk. We hypothesized that if the elk were nonmigratory, they would have well-defined home ranges; if migratory, they would exhibit seasonal ranges connected by migratory corridors. A second objective was to record activity patterns of elk and relate these patterns to habitat use and social organization. In order to pursue these objectives, we captured cow elk and individually color-marked some and instrumented others with radio transmitters.

ACKNOWLEDGEMENTS

This study could not have been conducted without the help of numerous individuals and support from many organizations. We extend special thanks and credit to Joel Varney, who designed and constructed the radiotracking equipment and to Jay Sumner who ably assited us in the field. Maurice Hornocker, Henry McCutchen, Harry Reynolds, Jr., Bob Gustafson, Jim Claar, Jim Romansky, and Jack Seidensticker, all, at one time or another, aided us in testing equipment or in collaring or tracking elk.

Special thanks are also due Mr. Lemuel Garrison, former Superintendent, and other personnel, of Yellowstone National Park; Dr. Melvin M. Payne, President, National Geographic Society; and Mr. Frank H. Goodyear, Treasurer, Environmental Research Institute. All, in different ways, encouraged us in our research efforts.

This study was supported by continuing Grant AT (45-1)-1929 from the Atomic Energy Commission, a National Geographic Grant and funds from the Bureau of Sport Fisheries and Wildlife.

In addition, we gratefully acknowledge financial aid from the Environmental Research Institute and the Philco-Ford Corporation. We received help and cooperation from the National Park Service, the University of Montana, the Montana Fish and Game Department, the State University of New York at Albany (Atmospheric Sciences Research Center), and the Yellowstone Park Company.

STUDY AREA

For study purposes, we selected the Norris and Old Faithful areas which were separated by an airline distance of 20 miles in Yellowstone National Park. The two study areas are characteristic of the more extensive range of the Madison Drainage herd.

In the Norris area, a narrow valley extends from 7,400 ft to over 8,000 ft in elevation and supports dense stands of lodgepole pine (Pinus contorta Dougl.) interspersed with such climax species as Engleman spruce (Picea englemannii Parry), subalpine fir (Abies lasiocarpa Nutt), and white-bark pine (Pinus albicaulis Engelm.) The mesic meadows or "mountain parks" are characterized by grasses, sedges (Carex spp.), marsh reedgrass (Calamagrostis spp.) and willows (Salex spp.). The dominant grasses in the drier sites are Idaho fescue (Festuca idahoensis Elmer) and bluegrasses (Poa spp.). The Old Faithful area is a broad valley lying at 7,600 to 7,800 ft and supports vegetation similar to that of the Norris study area. Only a small portion of each area is open meadows and parkland but these are apparently essential to the elk population (Fig. 1). The nearest weather stations, at Yellowstone Lake and West Yellowstone, normally record 45 to 60 in. of snow on the ground from January through March (Fig. 2). By comparison, elk of the Northern Yellowstone herd winter in the area of the Lamar and Gardiner weather stations; in that area the snow on the ground during the same period averages from 5 to 25 inches (Fig. 2). Elk of the Northern herd

Fig. 1. Map of the study area.

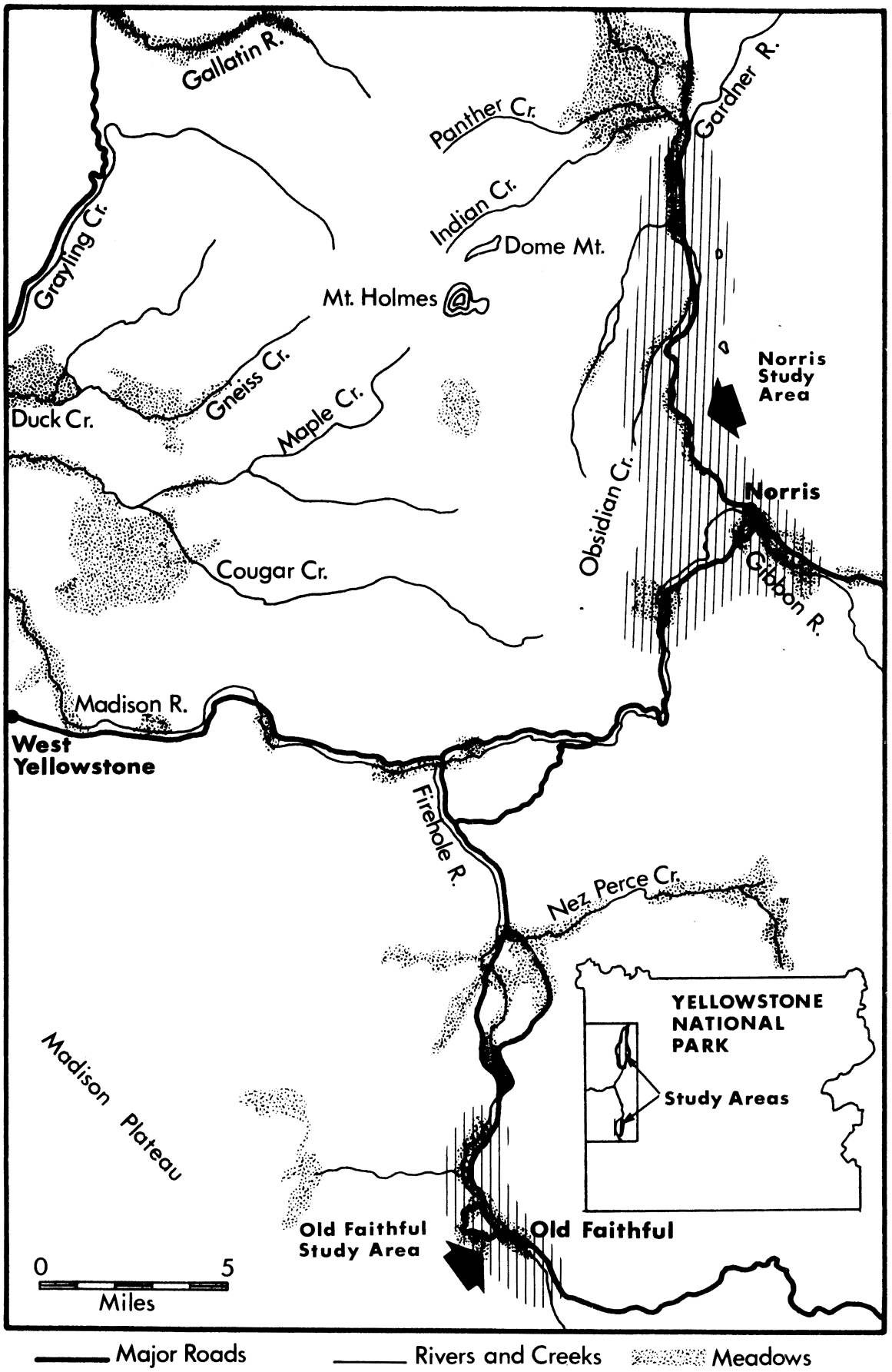
Gallatin R.
Panther Cr.
Gardner R.
Indian Cr.
Grayling Cr.
Dome Mt.
Mt. Holmes
Norris Study Area
Gneiss Cr.
Duck Cr.
Maple Cr.
Obsidian Cr.
Norris
Cougar Cr.
Gibbon R.
Madison R.
West Yellowstone
Firehole R.
Nez Perce Cr.
YELLOWSTONE NATIONAL PARK
Study Areas
Madison Plateau
Old Faithful Study Area
Old Faithful
0
5
Miles
Major Roads
Rivers and Creeks
Meadows

Fig. 2. Average maximum depth of snow on the ground at four stations in and near Yellowstone National Park during November-May for winter and spring 1966-67, 1967-68, and 1968-69.
From U. S. Department of Commerce Climatological Data for Wyoming (Vols. 75-78, Nos. 1-5, 11, 12) and Montana (Vols. 69-72, Nos. 1-5, 11, 12).

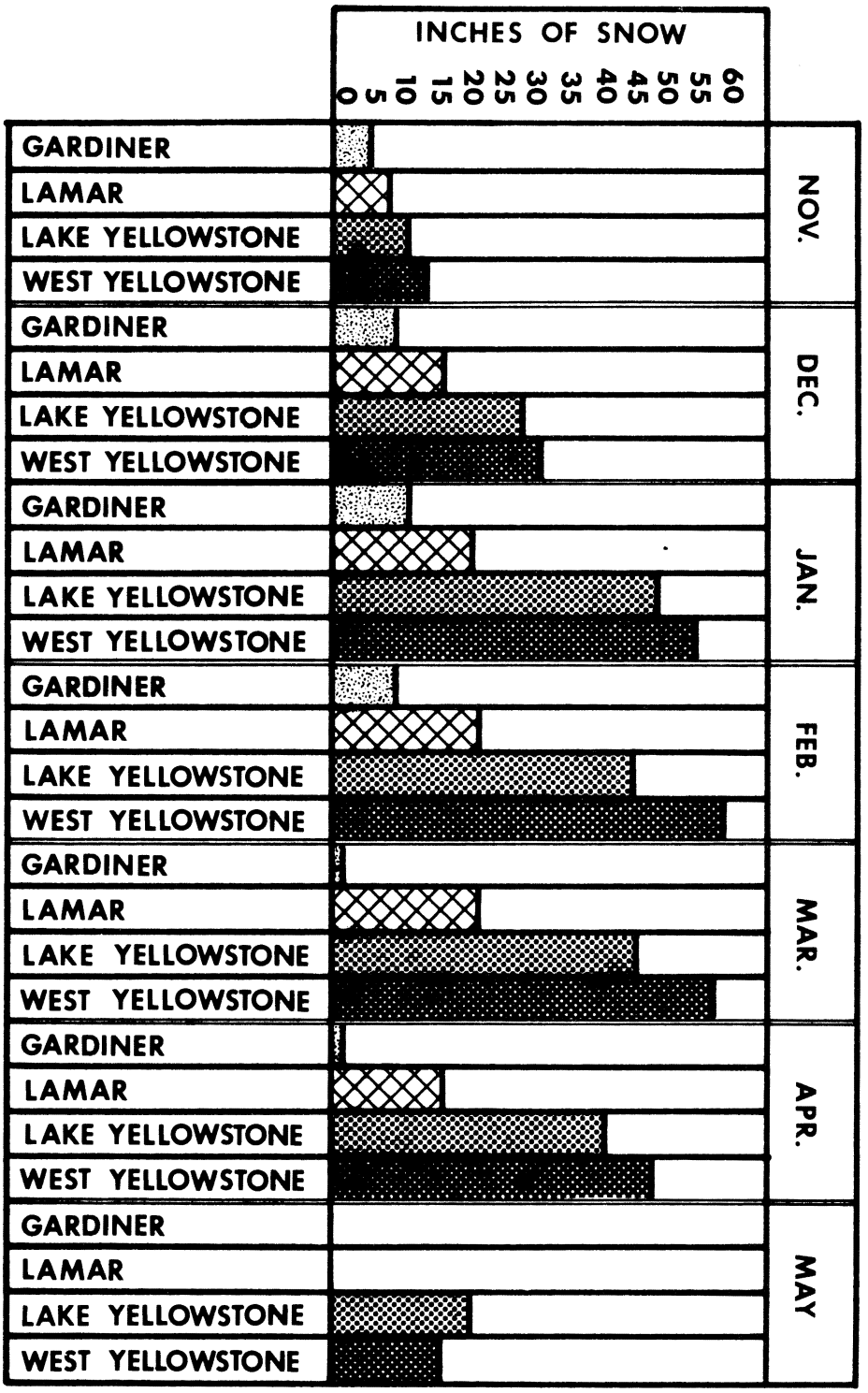
INCHES OF SNOW
0
5
10
15
20
25
30
35
40
45
50
55
60
GARDINER
LAMAR
LAKE YELLOWSTONE
WEST YELLOWSTONE
NOV.
DEC.
JAN.
FEB.
MAR.
APR.
MAY

seek wind-blown ridges and other areas of reduced snow depth, and sometimes move from the Lamar Valley to the Gardiner area in late winter. Because of the deep snow, elk could not winter in the Norris or Old Faithful study areas if it were not for the small, relatively snow-free thermal areas and warm streams that alter the winter environment furnishing both travel lanes and feeding areas. Snow does not remain on the thermal areas for extended periods of time.

In February 1966, the instrumented and marked elk which we observed in the Old Faithful area belonged to an elk band that consisted of 12 animals - 7 cows, 2 yearling bulls, and 3 calves.

Marked and instrumented elk in the Norris area belonged to four bands that intermingled but maintained their identity. In February of 1966, this group of elk consisted of 54 animals - 31 cows, 4 yearling bulls, and 19 calves.

METHODS AND MATERIALS

All elk captured for instrumenting or marking were shot with propulsive syringe darts loaded with succinylcholine chloride (Craighead et al. 1960) (Fig. 3). This drug is a short-acting muscle relaxant that blocks nerve transmission at the mononeural junctions. The average dose for an adult elk is approximately 1 mg per 45 lbs of body weight. Elk were most sensitive to the drug during the winter, less sensitive during spring and summer, and least sensitive during fall. Powder charge and CO_2 cartridge



Fig. 3. Cow elk immobilized with succinylcholine chloride.



Fig. 4. Deep snow conditions confine elk to the relatively snow-free thermal areas. Animals could be closely approached, immobilized, and instrumented.

guns were used and the elk were stalked to within shooting distance (50 to 150 ft) and shot in the neck or shoulder (Fig. 4). Thirteen elk were immobilized in 1965. Of 37 attempts to immobilize elk in 1966, only 18 (49%) were successful. Dosages required to immobilize elk during the field season of 1966 were almost double those of the previous year. We can offer no explanation for this at the present time (Fig. 5).

Radios enabled us to locate and observe specific elk from hour to hour, day to day, and season to season (Fig. 6). Total observation time was limited by manpower; the potential for gathering quantitative data far exceeded our operational capacity. Out of 1,216 elk-instrumentation days, only 246 days were utilized to observe the instrumented animals (Table 1). Nevertheless, this far exceeds the observation time possible without the use of radios.

During this study, 10 elk were immobilized and radio-instrumented a total of 15 times (Figs. 7 and 8). Eight provided data on space relationships and activity patterns sufficiently complete for analysis (Table 1). Eight other elk were color-marked with ear or neck markers, or ear tagged to identify individuals associated with the instrumented ones. Three cow elk (Nos. 2, 3, and 7) were instrumented and three calves and a cow were color-marked or ear tagged in the Old Faithful area. Five elk (Nos. 5, 6, 8, 10 and E) were instrumented at Norris and two cows were color marked. Later observations showed that all



Fig. 5. Fitting a radio collar over the head of an immobilized elk. Best results were obtained when the drug dosage prevented the elk from rising and was effective for not more than 15 or 20 minutes.



Fig. 6. Elk with fitted radio collar. At the time the picture was taken, the animal could control its head but could not rise.



Fig. 7. Testing radio signal from a bull elk fitted with a transmitter collar.



Fig. 8. Removing a non-operative radio collar to replace it.



Fig. 7. Testing radio signal from a bull elk fitted with a transmitter collar.



Fig. 8. Removing a non-operative radio collar to replace it.

Table 1

Summary of Radio Locating and Positioning Data
1965-1966

Elk No.	No. of Days Operating	No. of Days Attempted to Locate by Radio	No. of Days Successful	% Days Successful	No. of Days Visual Sightings Attempted With Aid of Signal	No. of Days Visual Sightings Were Made	% Sightings Successful
2	22	18	18	100	18	18	100
3	549	167	111	66	70	69	99
5	168	72	59	82	50	47	94
6	203	62	46	74	33	31	94
7	188	87	72	83	41	41	100
8	86	51	49	96	34	31	91
9	29	13	12	92	--	--	---
10	5	4	4	100	--	--	---
Sub-total	1,250	474	371	78	246	237	96

NOTE: Cow E is not included in this table because locations were obtained both by radio and color markers.

seven of the instrumented and marked elk at Old Faithful belonged to one band, while the seven instrumented and marked elk at Norris belonged to four rather distinct bands.

Location data for cow elk E were obtained from both radio fixes and sightings of color markers after the radio ceased to function (Fig. 9). Therefore, information obtained from this cow is not strictly comparable with that obtained from other radioed elk.

Elk congregate in social groups throughout the year (Fig. 10). By instrumenting one animal, we were able to track and observe the activities of groups of elk with which the individual associated. With the radiotracking system, we located the positions and determined the movements of instrumented animals at distances up to 10 miles; most animal positioning, however, was done at closer range. Daily movements of instrumented elk were used as the basis for constructing home and seasonal ranges.

Using the methods of Dalke (1942), Craighead (1956) and Mohr (1947), we enclosed a range area by connecting outlying fixes or points of location. This method enabled us to visually display ranges on topographic maps and relate space requirements to time and to animal activity. Centers of activity (Brown 1962) are those ecologic areas most intensively used by an animal and are analogous to Scott's (1943) "Theaters of activity." We determined these by mapping radioed elk's positions from radio fixes and by observing instrumented elk in the field.



Fig. 9. The individualized color marker of polyetheylene braided rope and polyvinyl tape allowed identification when radio collar was removed.



Fig. 10. Bull elk moving a harem from the lodgepole timber into a grassy meadow. Note marked cow.

Points of location for mapping home and seasonal ranges were determined by radio fixes and by sightings of instrumented animals after tracking them on foot with portable receivers. We used only one fix per day as a location point, whether this was obtained by triangulation or by radiotracking that resulted in observation of the instrumented animal. This solved the problem of how many points to utilize in defining ranges.

Centers of activity were delimited from clustered points of location within home ranges and also from location data which we obtained while recording activity patterns.

By radio tracking and observing instrumented animals for extended periods in the field, we were able to locate and define the centers of activity of individual elk more precisely than by fixes alone. However, the maximum concentration of fixes did coincide with the areas delineated as activity centers.

To obtain information on intrarange movements, we field-tracked individual animals. To record elk activity, we monitored individual animals for 24-hour periods. Thus, activity patterns of different elk can be compared as well as patterns for the same elk. We recorded data on diurnal activity largely from visual observations of instrumented animals. Nocturnal activity was determined by radio signals from conventional and motion-sensing transmitters. Official times for sunrise and sunset were obtained for each 24-hour period.

Sex and age classifications were obtained from systematic ground counts and total herd size was estimated from a combination of ground and aerial censuses.

EFFICIENCY OF THE RADIOTRACKING SYSTEM

The radiotracking system has been described by Craighead et al. 1963, Varney 1971, and Craighead and Craighead in press B.

The efficiency of the radiotracking system for locating animals in rough, heavily-timbered terrain is demonstrated in Table 1. Radio signals were used to locate animals from a distance by means of fixes obtained from two or more bearings and to move in, sight, and observe the animal (Craighead et al. 1963, Craighead and Craighead 1965). Cow elk were instrumented a total of 1,250 days. Attempts to locate these elk by radio signals were successful on 371 of 474 days - a 78% success. Of 246 attempts to move in and sight the elk with the aid of the radio signal, 237 (96%) were successful (Table 1). In 1965, four nonmigratory elk were instrumented for a total of 596 days. On each of 184 days an attempt was made to locate these elk. We were successful in locating them on 161 of the 184 days for 88% success. There were 126 attempts (one attempt per day) to sight the elk with the aid of the signal and 122 (97%) of these were successful. In 1966, six nonmigratory elk were instrumented 654 days and attempts were made to locate them on 290 days - we were successful on 210

(72% success). Of 120 attempts to sight the elk with the aid of the radio signal, 115 (96%) were successful. Elk No. 3 was instrumented longer than any of the other elk. During 1965 and 1966 she was instrumented a total of 549 days. We attempted to position her on 167 days and were successful on 111 of these, or 66% of the time. We were 99% successful (69 of 70 days) in sighting the elk with the aid of the radio signal. Elk No. 6 was instrumented 203 days. Of the 62 days we attempted to position her, we were successful on 46 days for a 74% success, and we had a 94% success (31 of 33) in sighting this elk by radiotracking her (Table 1).

Success in locating and sighting instrumented animals varied with a number of factors such as shielding effect of hills and timber, experience of the receiver operator, transmitter and receiver battery condition, and differences in activity and movement patterns of individual elk.

HOME RANGE CONCEPTS

The concept of home range and the techniques used for obtaining and analyzing range data have been exhaustively reviewed by Hayne (1949), Stickel (1954), Sanderson (1966), Mohr and Stumpf (1966), and Brown (1962). Robinette (1966) reported on the home range of mule deer (Odocoileus hemionus Rafinesque) and reviewed home range concepts as they applied to big game species.

Burt (1943) defined home range as "that area traversed by

the individual in its normal activities of food gathering, mating, and caring for young." He recognized that the home range need not cover the same area during the life of the individual and that migratory animals have different home ranges in summer and winter. Burt's definition of home range has been widely accepted but also greatly modified as study techniques have improved .

The concept of describing a proportion of an animal's activities that occur within a given distance from the "center of activity" adopted from Dice and Clark (1953), and Calhoun and Casby (1958) by Robinette (1966) for describing mule deer home ranges is essentially a mathematical rather than an ecologic expression. It leaves much to be desired in interpreting data obtained by radiotelemetry.

How to draw or define the limits of a range has been a problem in all studies of animal movements. Sanderson (1966) recently reviewed the methods used. Many problems of the indirect observational technique of trapping and capture are not inherent in biotelemetric data. An animal's biological needs are related to a specific land area and to the capacity of that area to support the animal. Therefore, we believe it is important to retain the area concept and to relate it to the individual's biological requirements, and to its activity in time and space. The technique of biotelemetry enabled us to delimit land areas vital to individual elk, to determine seasonal use of this land area in meeting seasonal needs of the individual and to observe activity and behavior that had spacial and temporal significance in the life of the individual.

RESULTS AND DISCUSSION

Movement data were obtained from six of the cow elk instrumented during 1965 and 1966 for a combined total of 1,216 days. The season and length of time during which elk were instrumented and observations made are shown in Tables 2 and 3. These periods were established as days between an initial and a final fix or sighting; cow E was an exception. The number of fixes and animal locations recorded during these periods are the bases for the range determinations.

When the study began, we planned to confine our efforts to radiotracking two or three cow elk for a period of one year in order to describe their home ranges and activities. However, the difficulty of recapturing specific elk for reinstrumentation precluded this. The study of spacial relationships was extended through a second year in order to obtain adequate seasonal range data and it was necessary to capture and instrument new individuals when the initially instrumented animals could not be recaptured or when recapture involved long delays. This complicated the task of datum analysis but strengthened the basis for conclusions. Some instrumented elk were located only as time permitted while others were radiotracked for days at a time and 24-hour activity patterns were recorded. Population data, incidental to the major research objectives, were gathered intermittently from 1965 to 1971 in order to relate the study of movements to the general ecology of the herd.

Table 2

Seasonal Home Range Data of Cow Elk
1965-1966

Type of Range	Study Area	Elk No.	No. of Fixes or Locations	Observation Period (Days)**	Range (Sq. Mi.)
Winter (65-66)*	Old Faithful	2	41	58	1.5
Winter (65-66)*	Old Faithful	3	70	97	0.9
Winter (66)	Old Faithful	7	48	48	0.9
Winter (66)	Norris	5	6	19	0.2
Winter (66)	Norris	6	12	23	0.1
Winter (66)	Norris	8	18	18	0.4
Winter (66)	Norris	E***	10	21	0.1
Spring (65-66)*	Old Faithful	3	33	184	1.3
Spring (65-66)*	Norris	5	35	138	2.4
Spring (66)	Norris	6	28	92	1.7
Spring (66)	Norris	8	36	92	2.0
Spring (66)	Norris	E***	22	92	0.7
Summer (66)	Old Faithful	3	5	78	3.5
Summer (65-66)*	Norris	5	42	154	6.5
Summer (66)	Norris	6	7	61	1.2
Fall (65)	Old Faithful	3	14	60	2.0
Fall (65)	Norris	5	21	30	5.8
Fall (65)	Norris	6	21	34	6.4

*An aggregate range made by combining location points for the same season of two different years.

**Sum of time intervals that elk were under observation.

***Some visual locations obtained after the radio ceased operating have been included. Thus, data for cow E are not entirely biotelemetric data.

Table 3

Home Range Data for Cow Elk

Study Area	Elk No.	Type of Home Range	No. of Locations	Days** of Observation	Area (Sq. Mi.)	% of Home Range
Old Faithful	3	Home (1965-66)	122	419	6.0	100
		Seasonal Components				
		Winter (65-66)*	70	97	0.9	15.0
		Spring (65-66)*	33	184	1.3	21.6
		Summer-Fall (65-66)	19	138	5.2	86.7
Norris	5	Home (1965-66)	104	341	10.0	100
		Seasonal Components				
		Winter (66)	6	19	0.2	2.0
		Spring (65-66)*	35	184	2.4	24.0
		Summer*-Fall (65-66)	63	184	8.2	82.0
Norris	6	Home (1965-66)	68	210	11.8	100
		Seasonal Components				
		Winter (66)	12	23	0.1	0.8
		Spring (66)	28	92	1.7	14.4
		Summer-Fall (65-66)	28	95	7.5	63.6
Old Faithful	2,3 & 7	Composite Range (1965-66)	263	589	6.5	
Norris	5,6, 8 & E	Composite Range (1965-66)	277	499	16.1	

*An aggregate range made by combining location points for the same seasons of two different years.

**Sum of the time intervals that elk were under observation.

Size of Seasonal Ranges: Seasonal ranges are the land areas occupied by elk during these periods: spring, 21 March to 21 June; summer, 21 June to 23 September; fall, 23 September to 22 December; and winter, 22 December through 20 March. Although climatic and phenological conditions for any given season do not conform strictly to the spring and autumn equinoxes or the summer and winter solstices, nevertheless, we found the periods included between these dates useful in standardizing and subdividing the seasonal behavior, activity, and movements of elk. We have designated seasonal ranges - spring, summer, fall and winter and utilized the term aggregate when the range size was computed from data accumulated during two or more years (Fig. 11 - 15 and Tables 2 and 3).

Data on size of seasonal ranges (Table 2) show that the winter ranges varied in size from 0.1 to 1.5 square miles. These ranges, shown in Figs. 11 and 12, were associated with relatively snow-free thermal areas. Elk were restricted in their movements by deep snow, and travel lanes followed the stream beds from one snow-free thermal area to the next. Movement into lodgepole forests to seek shelter and food was limited. Because of specialized feeding habits, these elk were able to winter within small ranges confined to thermal areas without showing signs of severe malnutrition. Spring ranges tended to be larger than winter ranges. Their greater size reflected the increased movement of elk in response to the recession of snow and the availability of new and different forage. These ranges varied in size from 0.7 to 2.4 square miles.

Fig. 11. Winter and aggregate - winter ranges of elk numbers 2, 3 and 7 (1965-66).

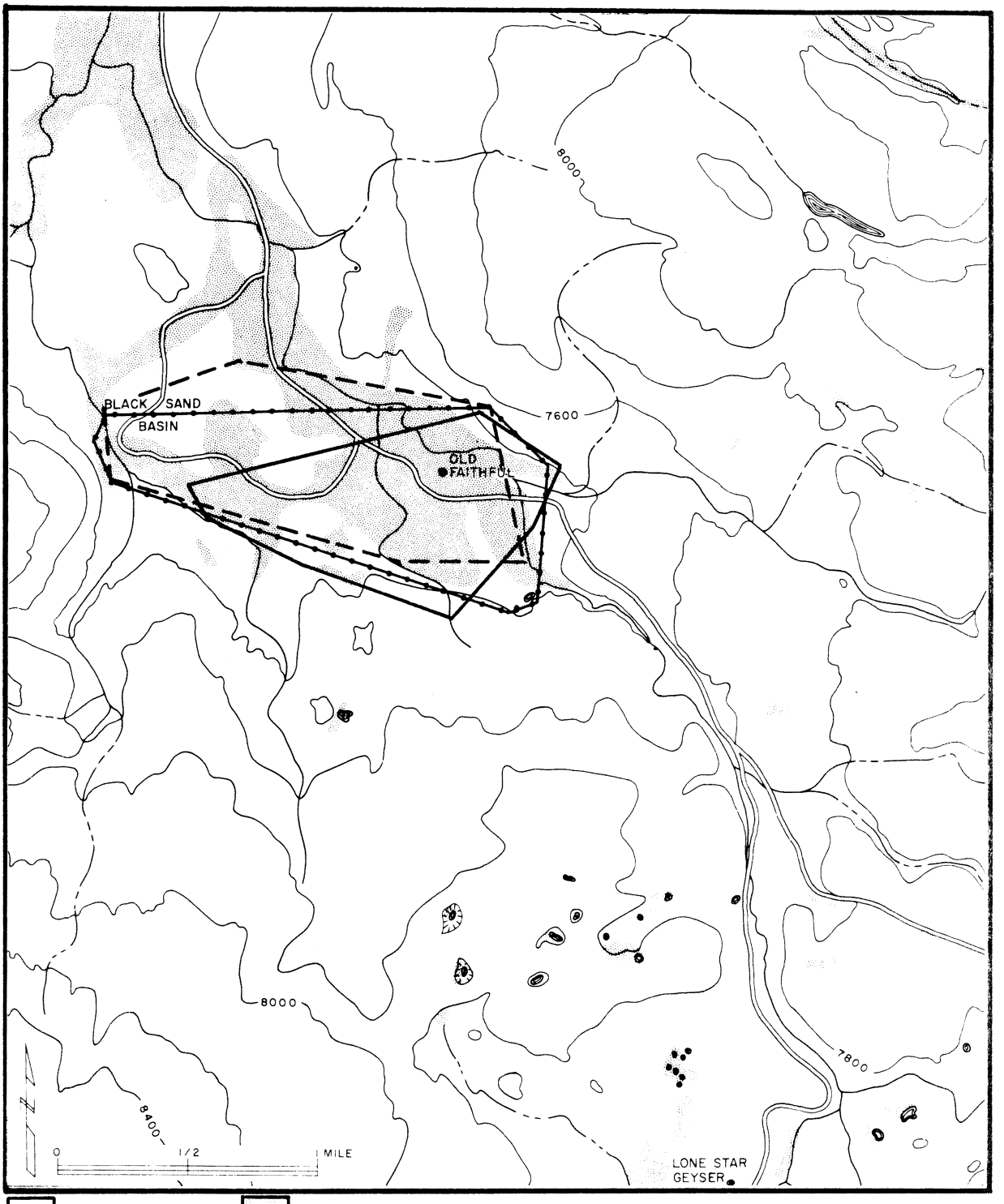

TIMBER

OPENINGS

ELK NO. 2 AGGREGATE – WINTER 1965 – 1966

ELK NO. 3 AGGREGATE – WINTER 1965 – 1966

ELK NO. 7 WINTER 1966

Fig. 12. Winter ranges of elk numbers 5, 6, 8 and E (1965).

Fig. 13. Spring and aggregate - spring ranges of elk numbers 5, 6, 8 and E (1965-66).

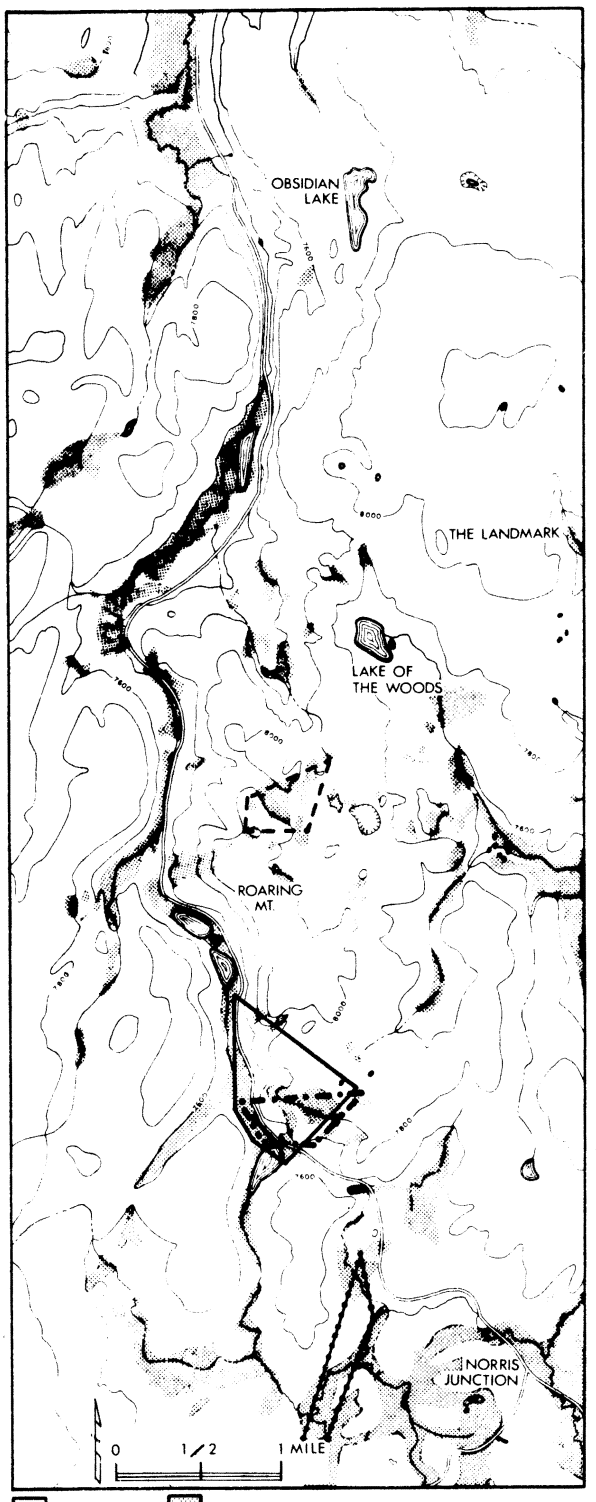

TIMBER OPENINGS

ELK NO. 5
ELK NO. 6
ELK NO. 8
ELK NO. E

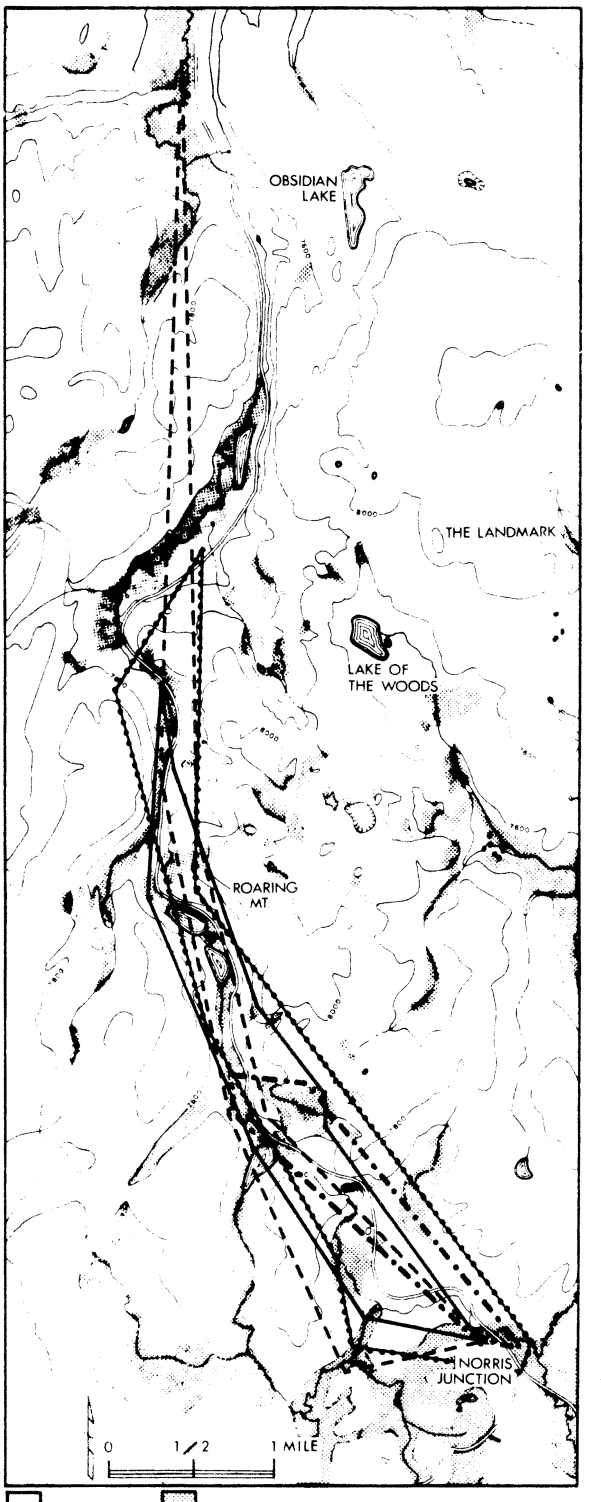

TIMBER OPENINGS

ELK NO. 5 AGGREGATE — SPRING 1965 — 1966
ELK NO. 6 SPRING 1966
ELK NO. 8 SPRING 1966
ELK NO. E SPRING 1966

In the Norris area, where deep snow persisted on the slopes until mid-May, elk were confined to the floor of the narrow valley. This partially accounted for the linear shape of the spring ranges (Fig. 13). A similar range pattern did not develop during spring in the broader valley of the Old Faithful geyser basin (Fig. 14).

The summer and fall ranges (Figs. 14 and 15) tended to approach the home range in size. During these seasons elk were very active, traversing most of the home range area and occasionally traveling the entire length in a period of a few days. What determines the limits of a home range is not at all clear, but a few "key" elk, perhaps dominant individuals, may set the range size for a band of elk.

Size of Home Ranges: Using biotelemetry, enough locations can be obtained to delimit an individual elk's home range in some detail. For the purpose of this study, we have defined home range as an area traversed by an individual elk throughout at least four consecutive calendar seasons and in which it meets all of its biological requirements. Movements demanded by seasonal requirements are basic components of a home range. This is true whether seasonal requirements must be acquired in separate areas or can be satisified within a relatively small area.

The home ranges and their seasonal components established for elk numbered 3 and 5 are presented in Table 3 and in Figs. 14

Fig. 14. Home range and its Seasonal Components for elk number 3 (1965-66).

In the Norris area, where deep snow persisted on the slopes until mid-May, elk were confined to the floor of the narrow valley. This partially accounted for the linear shape of the spring ranges (Fig. 13). A similar range pattern did not develop during spring in the broader valley of the Old Faithful geyser basin (Fig. 14).

The summer and fall ranges (Figs. 14 and 15) tended to approach the home range in size. During these seasons elk were very active, traversing most of the home range area and occasionally traveling the entire length in a period of a few days. What determines the limits of a home range is not at all clear, but a few "key" elk, perhaps dominant individuals, may set the range size for a band of elk.

Size of Home Ranges: Using biotelemetry, enough locations can be obtained to delimit an individual elk's home range in some detail. For the purpose of this study, we have defined home range as an area traversed by an individual elk throughout at least four consecutive calendar seasons and in which it meets all of its biological requirements. Movements demanded by seasonal requirements are basic components of a home range. This is true whether seasonal requirements must be acquired in separate areas or can be satisified within a relatively small area.

The home ranges and their seasonal components established for elk numbered 3 and 5 are presented in Table 3 and in Figs. 14

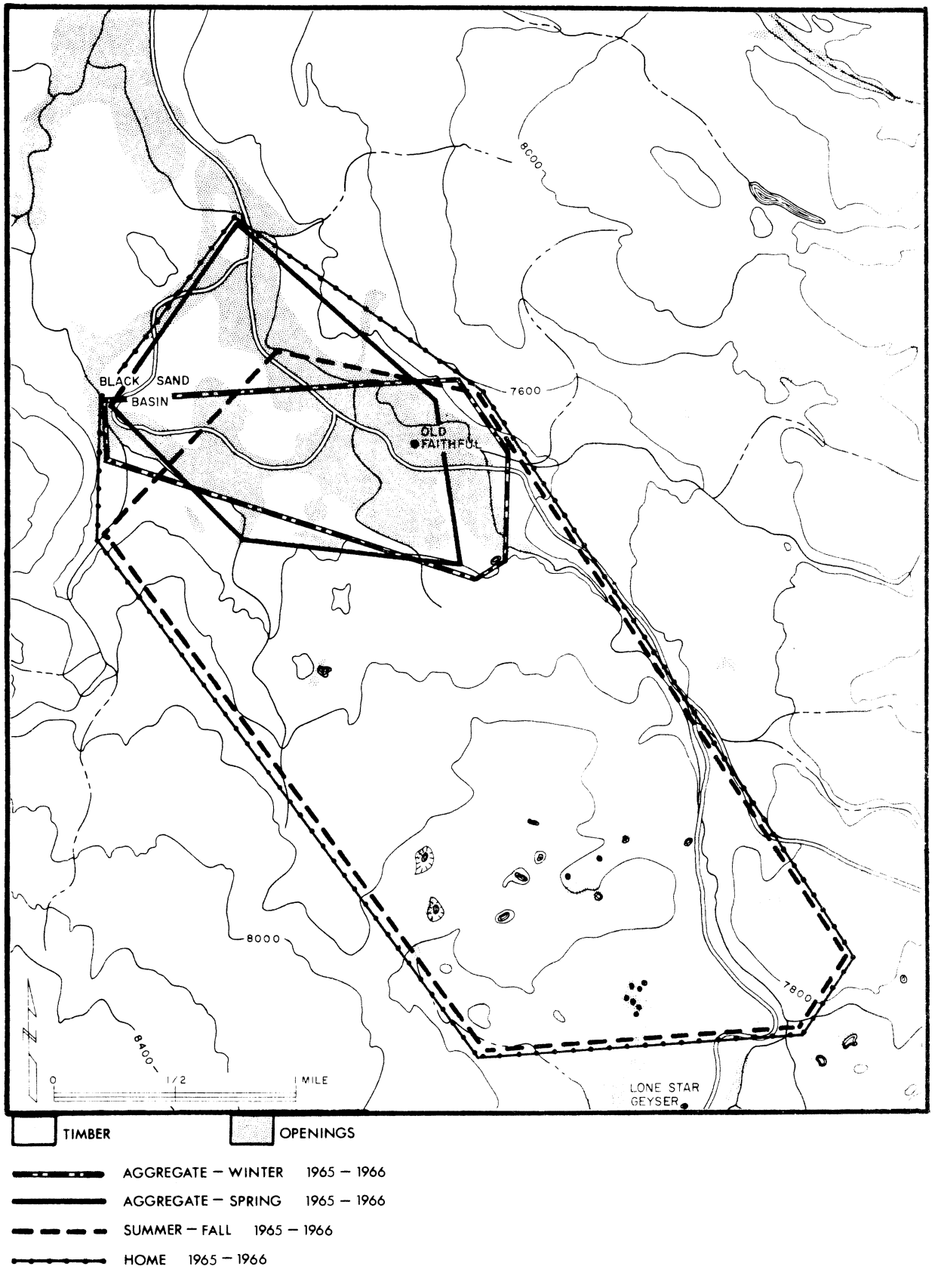
BLACK SAND BASIN
OLD FAITHFUL
8000
7600
8000
7800
8400
N
0
1/2
MILE
LONE STAR GEYSER
TIMBER
OPENINGS
AGGREGATE — WINTER 1965 — 1966
AGGREGATE — SPRING 1965 — 1966
SUMMER — FALL 1965 — 1966
HOME 1965 — 1966

Fig. 15. Home range and its Seasonal Components for elk number 5 (1965-66).

Fig. 16. Home ranges of elk numbers 5 and 6 (1965-66).

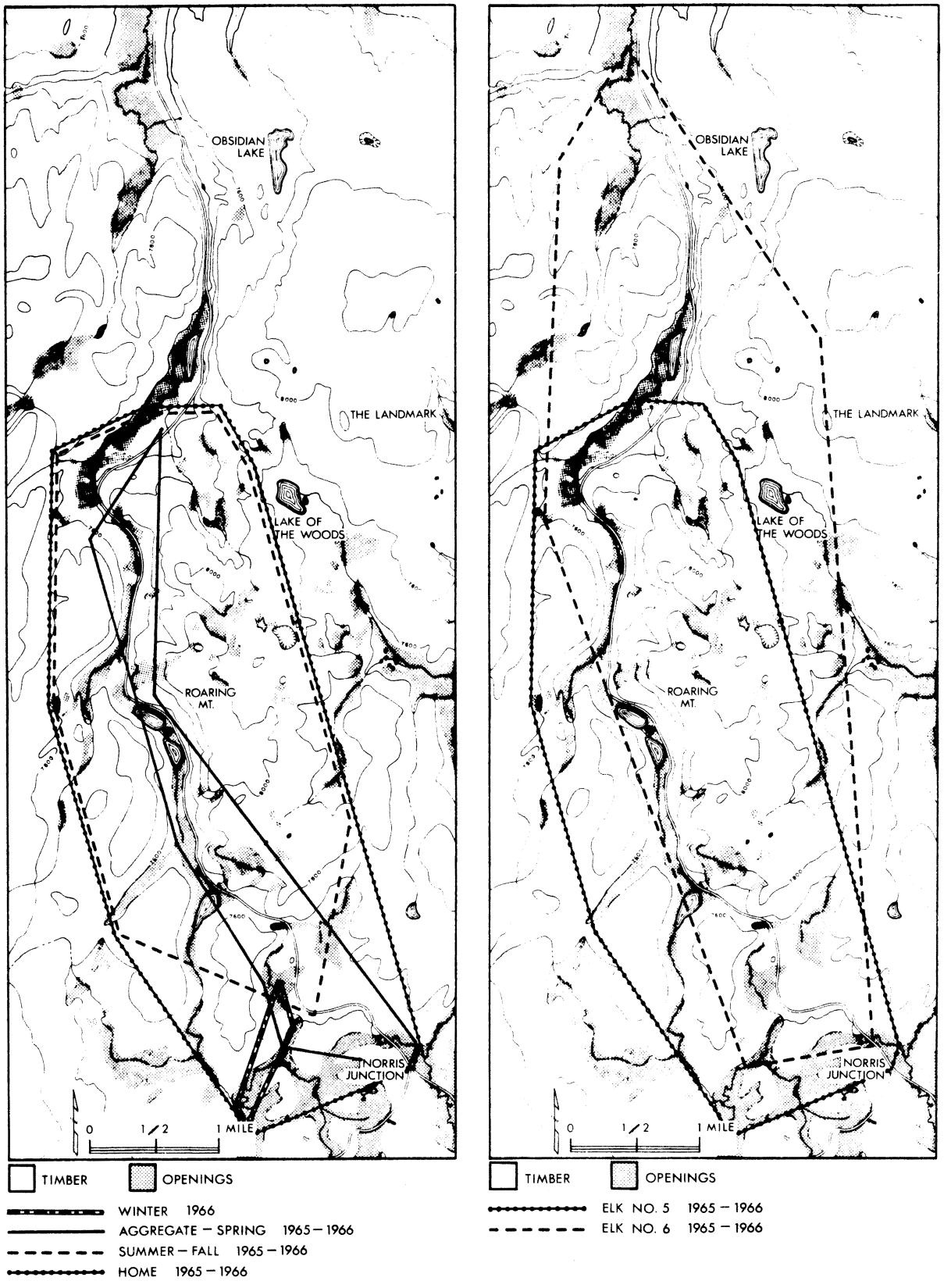
OBSIDIAN LAKE
THE LANDMARK
LAKE OF THE WOODS
ROARING MT.
NORRIS JUNCTION
0
1/2
1 MILE
TIMBER
OPENINGS
WINTER 1966
AGGREGATE – SPRING 1965 – 1966
SUMMER – FALL 1965 – 1966
HOME 1965 – 1966
ELK NO. 5 1965 – 1966
ELK NO. 6 1965 – 1966

and 15. The home range of elk number 6 is shown in Fig. 16. Ranges for these elk were 6.0, 10.0, and 11.8 square miles in size, respectively. All three elk seasonally used different portions of their home ranges which could be related to the elk's seasonal needs. The winter and spring ranges represented only a small part of the home range area. The sizes of seasonal ranges relative to home ranges are shown in Figs. 14 and 15 as well as in Table 3. Observations of marked and instrumented elk of the Norris and Old Faithful areas during 1967, '68, and '69 have shown little or no change in the areas of land described here as utilized by those animals during 1965 and 1966.

Composite Ranges: Our observations suggest that the elk bands we studied are cohesive units, yet they intermingle and individual animals may leave one band and join another for varying periods. The four elk bands at Norris intermingled and congregated into a single band for short periods of time. This was especially noticeable after calving and at the end of winter. There were exchanges among the instrumented animals from each band. We plotted 277 location points for the four instrumented cow elk in the Norris area and computed a composite home range size of 16 square miles for them (Table 3 and Fig. 17). This composite range of four elk from four rather discrete bands is the area traversed and inhabited by them throughout a year or longer. The area of this composite range was approximately 40% larger than the home range

Figure 17. Composite range and centers of activity of elk numbers 5, 6, 8 and E (1965-66).

Fig. 19. Spring range with centers of activity of elk number 5 (5-6-65 to 6-17-65).

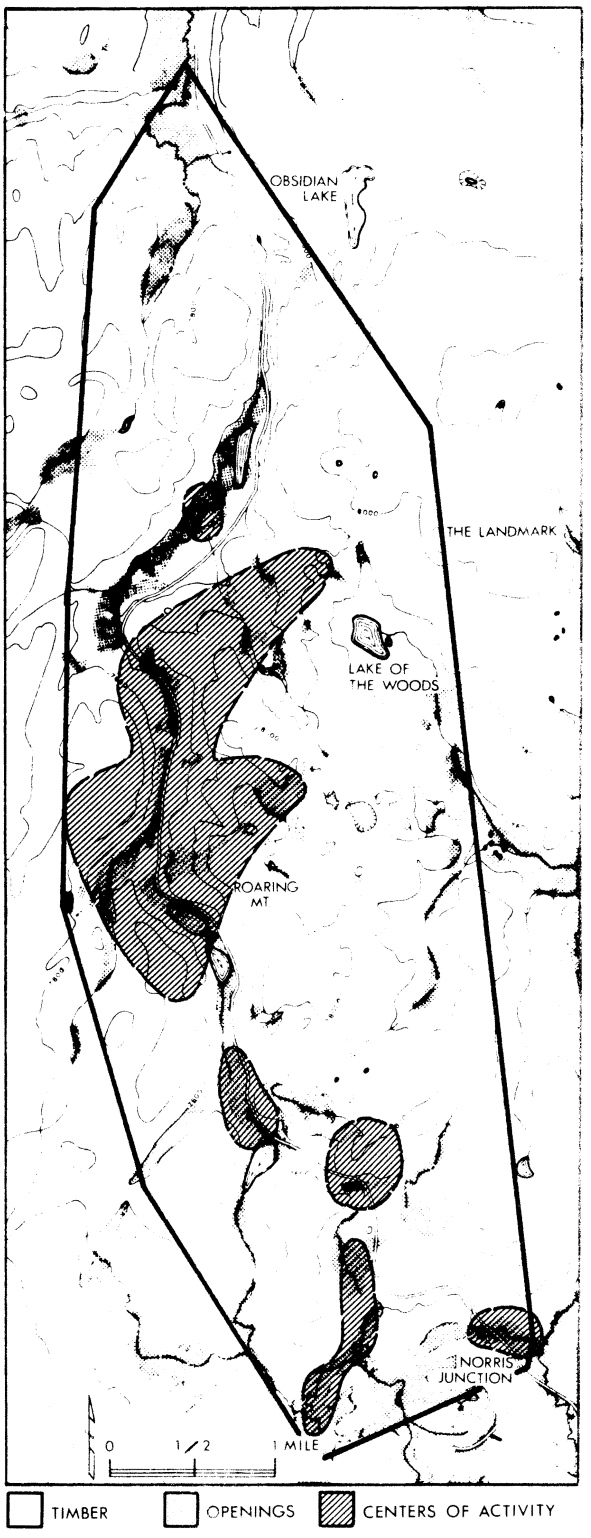
OBSIDIAN LAKE
THE LANDMARK
LAKE OF THE WOODS
ROARING MT
NORRIS JUNCTION
0
1/2
1 MILE
TIMBER
OPENINGS
CENTERS OF ACTIVITY

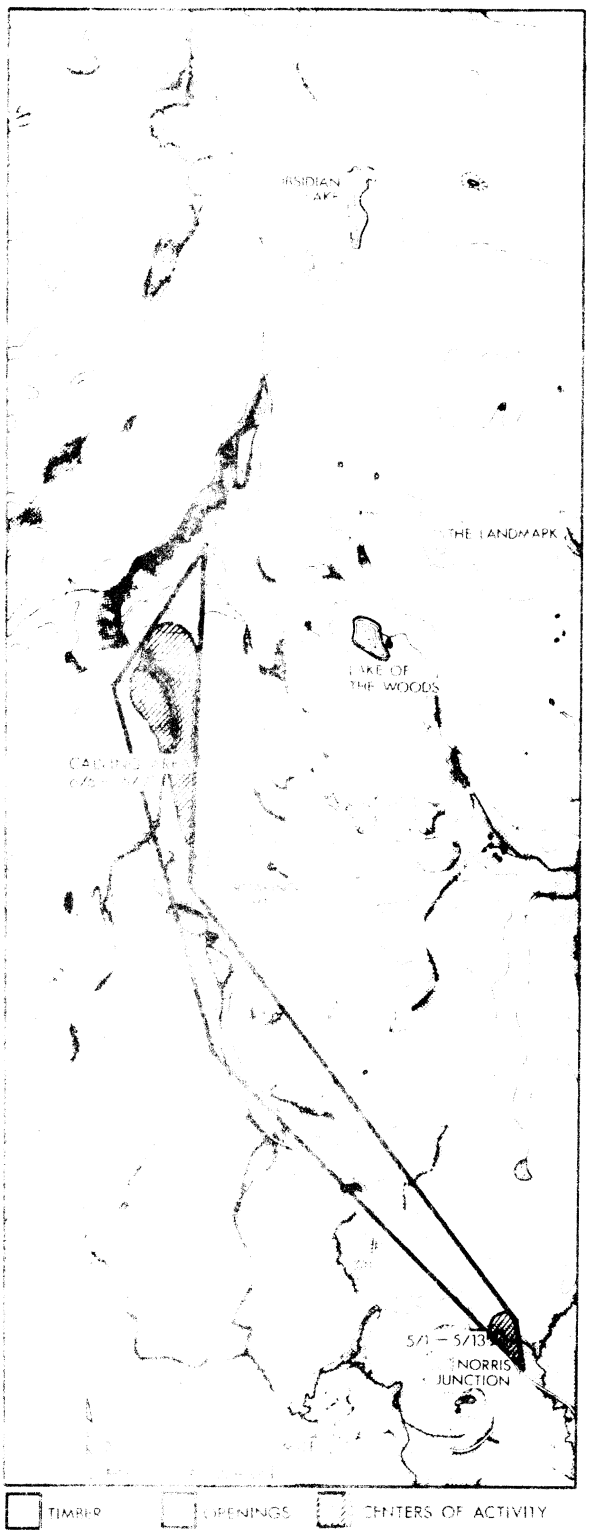
THE LANDMARK
LAKE OF THE WOODS
NORRIS JUNCTION
TIMBER
OPENINGS
CENTERS OF ACTIVITY

Fig. 18. Composite range and centers of activity of elk numbers 2, 3 and 7 (1965-66).

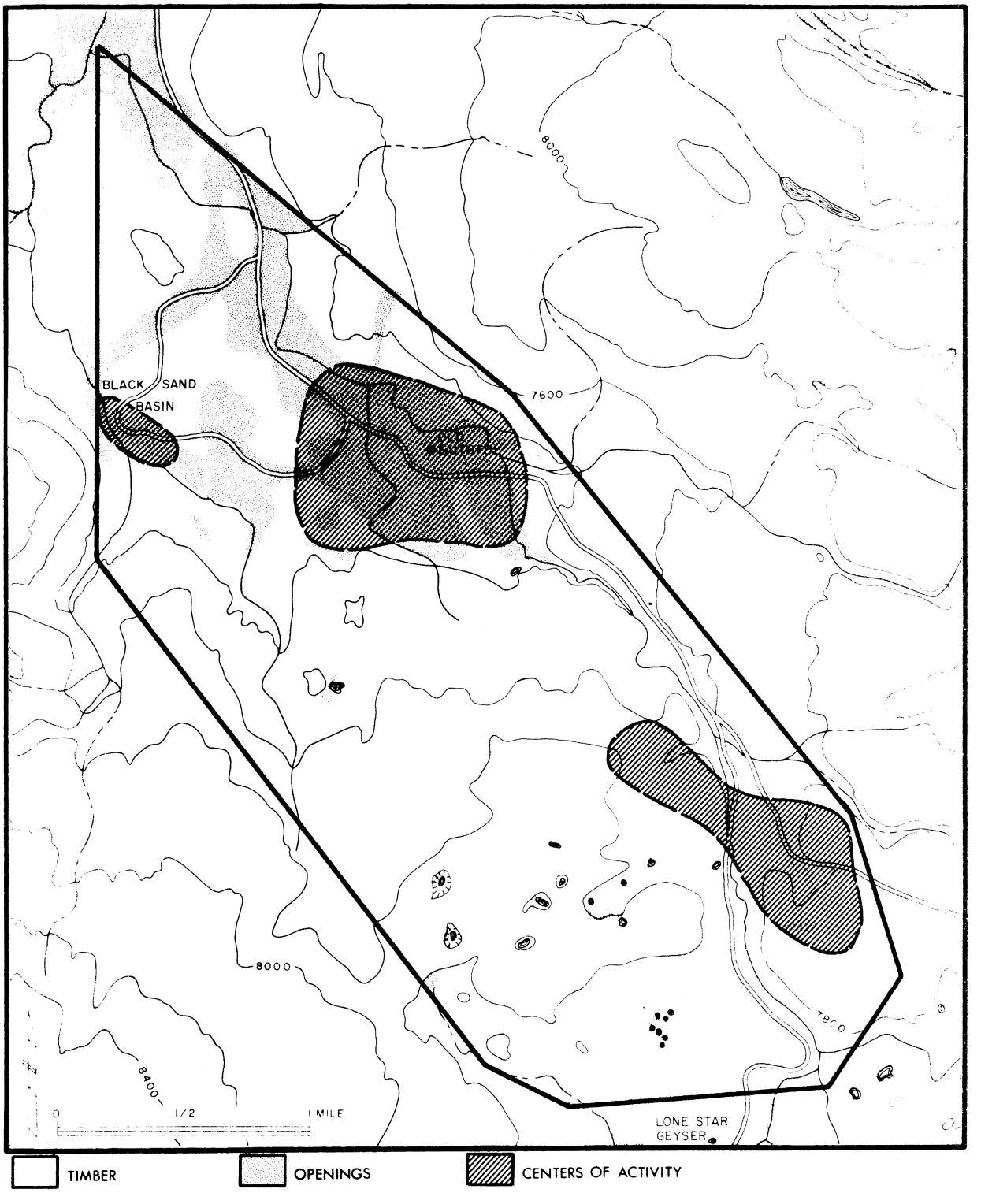
BLACK SAND BASIN
8000
7600
8000
7800
8400
0
1/2
MILE
LONE STAR GEYSER
TIMBER
OPENINGS
CENTERS OF ACTIVITY

of elk No. 5 and 25% larger than that of elk No. 6. The fact that this composite range did not greatly exceed the size of home ranges of individual elk supports our observations of intermingling of individual elk from different bands.

A composite range plotted from 263 location points for three elk belonging to the same band in the Old Faithful area was 6.5 square miles in size (Tables 1 and 3, and Fig. 18). This is almost identical in area with the home range determined for elk No. 3, a member of the band, and shows, as expected for a social animal, that the spacial requirements of several elk and possibly the entire band did not differ greatly from the area requirements of a single elk. This suggests that the cohesiveness of elk bands may be associated with specific land areas rather than with animal-to-animal associations.

Centers of Activity: Elk 3, 5 and 6 were tracked and observed more intensively than any of the other instrumented animals (Tables 1, 2 and 3). Seasonal centers of activity are shown for elk No. 5 in Figs. 19, 20 and 21; for elk No. 3 in Fig. 22; and for elk No. 6 in Fig. 24. Elk No. 5 was observed in the Norris area on 1 May 1965. She could be individually recognized but she was not instrumented until 6 May of that year. Deep snow and the availability of sedge shoots (Carex spp.) confined her to a relatively small center of activity along the Gibbon River from 1-15 May. Her longest daily movements, which were to feed, did

Fig. 20. Summer range with centers of activity of elk number 5 (5-21-65 to 9-20-65).

Fig. 21. Fall range with centers of activity of elk number 5 (9-21-65 to 11-2-65). Centers of activity established between 7-23-65 and 12-22-65.

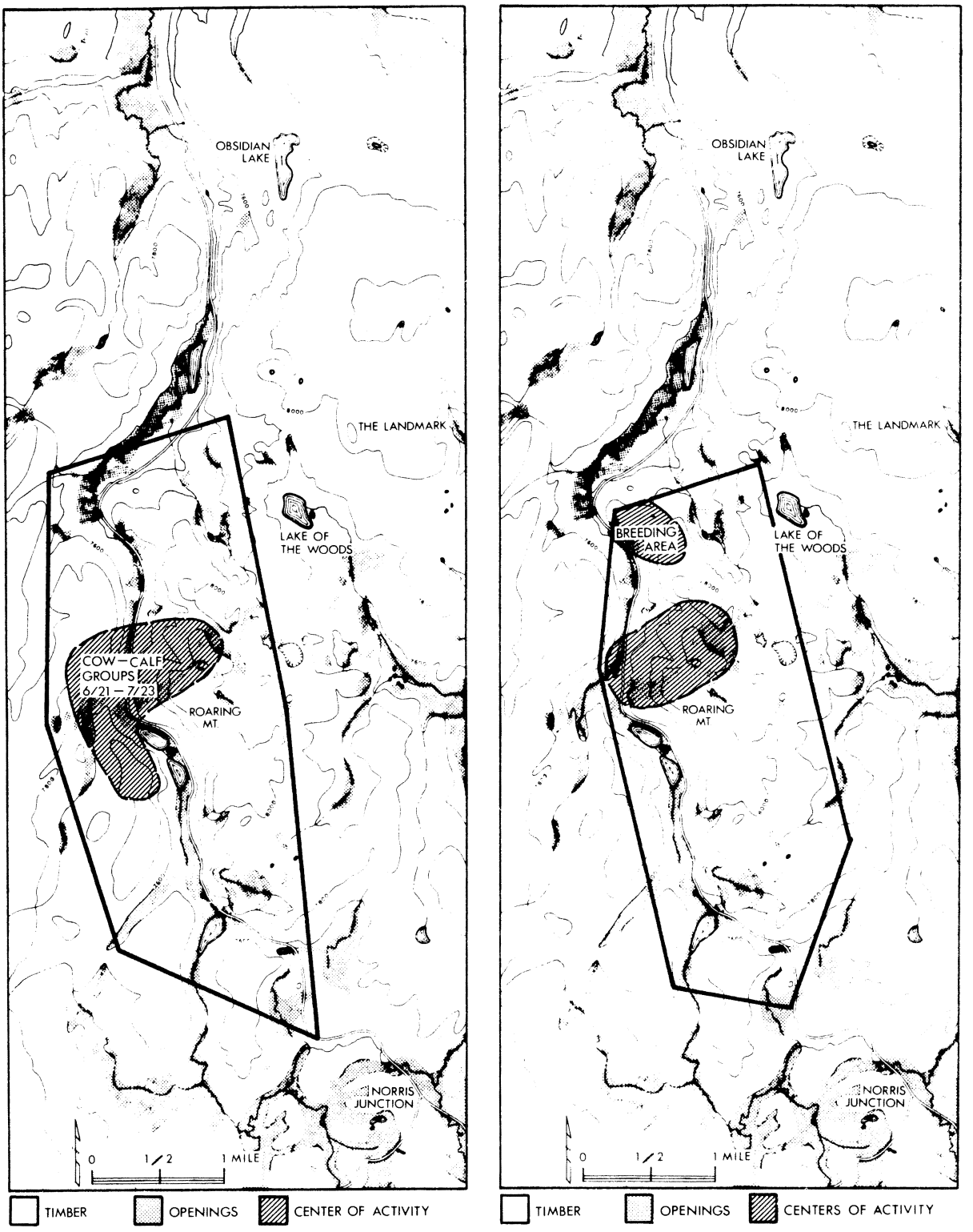
OBSIDIAN LAKE
THE LANDMARK
LAKE OF THE WOODS
COW–CALF GROUPS 6/21 – 7/23
ROARING MT.
NORRIS JUNCTION
0
1/2
1 MILE
TIMBER
OPENINGS
CENTER OF ACTIVITY
OBSIDIAN LAKE
THE LANDMARK
BREEDING AREA
LAKE OF THE WOODS
ROARING MT.
NORRIS JUNCTION
0
1/2
1 MILE
TIMBER
OPENINGS
CENTERS OF ACTIVITY

not exceed a quarter mile. When the snow receded, she moved northward approximately 4½ airline miles and calved between 6 and 21 June. The calf died at birth or soon thereafter. Following parturition, No. 5 moved south to Roaring Mountain, where she became a member of a cow-calf group of about 30 adults. Her summer range and the center of activity which she shared with other cows is shown in Fig. 20. In late summer, she moved to the northern periphery of her range and as a member of a harem confined most of her time to the breeding area and her summer activity center (Fig. 21). She utilized these two areas until 22 Dec. when she began moving south to her winter range (Fig. 12). Her winter range (Fig. 15 and Table 3) was apparently very restricted. She was observed too infrequently during winter to define her centers of activity on the winter range.

Centers of activity for elk No. 3, in the Old Faithful area, were delimited within her winter and spring ranges. These are shown in Fig. 22. Her aggregate range for the winters of 1965 and 1966 was less than one square mile; and her aggregate spring range, also for two seasons, was 1.3 square miles (Table 3). Land areas intensively used by elk No. 3 during winter and spring were essentially the same. These centers of activity comprised less than one-third of her winter-spring range.

On 2 June 1965, elk No. 3 was observed to be nearing parturition. She was sighted 9 June with a newborn calf. The cow

Fig. 22. Aggregate winter and spring ranges with centers of activity for elk number 3 (1965-66).

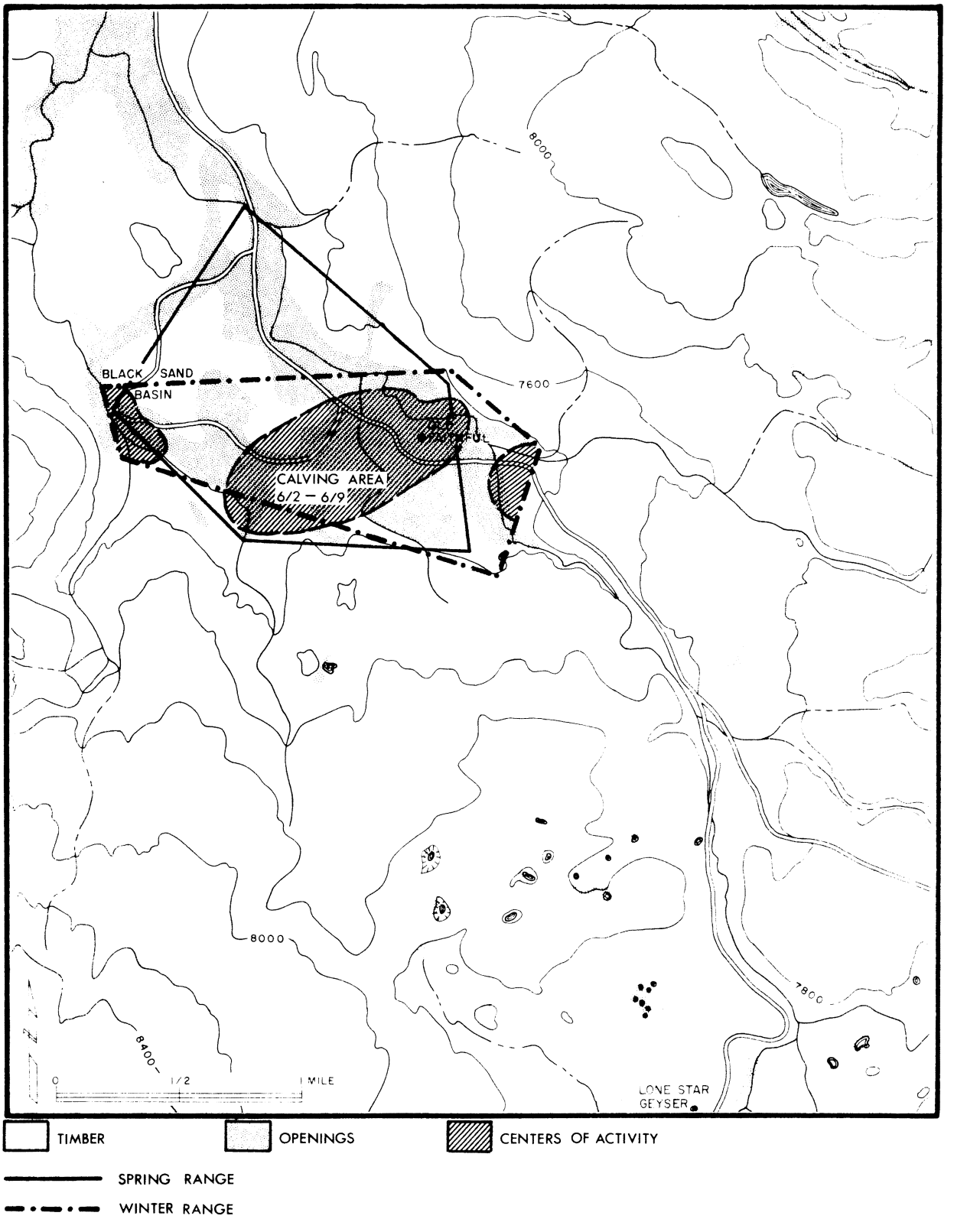
BLACK SAND BASIN
CALVING AREA
6/2 – 6/9
8000
7600
8000
7800
8400
0
1/2
1 MILE
LONE STAR GEYSER
TIMBER
OPENINGS
CENTERS OF ACTIVITY
SPRING RANGE
WINTER RANGE

and calf were relocated the following day and the calf captured and color-marked. The approximate calving site is indicated in Fig. 22. The cow and calf remained in the calving area until early July. Lack of manpower precluded continued monitoring and observation and No. 3's summer and fall ranges were not defined until 1966 (Fig. 14).

The centers of activity delimited for elk No. 5 and No. 3 were shared by other elk; sometimes as many as 30 or more. Centers plotted from information gained during 682 hours of following radioed elk and seventeen 24-hour activity patterns totaling 408 hours are shown in Figs. 17 and 18. These centers are used intensively by cow elk and their offspring throughout the year and include major feeding sites and retreats used for calving, breeding, bedding and escape.

At Norris, the areas designated as centers of activity represented 17% of the composite range of marked and instrumented elk; at Old Faithful, they composed 14%. These relatively small areas were the essential portions of home ranges. Breeding, calving, and about 85% of the feeding and bedding occurred within the limits of the centers of activity. It is obvious that food preference and forage utilization studies should be conducted within the centers of activity. A more detailed study of these "key areas" should help to refine concepts of carrying capacity. Also, more detailed analysis of the centers of activity would reveal

specific habitat and micro-habitat requirements. The fact that both instrumented elk that calved (Nos. 3 and 5) left their respective cow groups several days prior to parturition and gave birth, while isolated from other elk, indicated the need for solitude. Both calved within the activity centers in dense lodgepole timber. Following parturition, both cows rejoined cow-calf groups.

Movements Within Ranges: Movements of elk seldom exceeded a mile during a 24-hour period, except during late summer and fall. Most day and night movements were short and were made between bedding and feeding areas. Data obtained from elk No. 5 and 6, in the Norris area, illustrate intra-range movements. During 1965, No. 5 was radiotracked and observed during all seasons except winter. In the spring, she traveled from the south end of her spring range to the north end, a distance of 5-$\frac{1}{4}$ airline miles during a 34-day period. In summer, she traversed the length of her summer range (4-3/4 airline miles) in 18 days. During the fall, she moved between range peripheries, a distance of 4.0 miles in 7 days.

Daily distances traveled by elk No. 5 during four seasonal tracking periods are shown in Table 4 and Fig. 23. In early spring of 1965, she traveled an average daily distance of 0.15 miles. During this time, she was in poor condition and had to buck deep, wet snow to travel. Food was availabe at a few exposed sites, and snow conditions were not conducive to movement. Later in the spring, she averaged 0.72 miles per day, and had regained some of the body

Table 4

Some Movements of Elk No. 5 Related to Seasons

Norris Area - 1965

	Season			
	Spring	Spring	Summer	Fall
PERIOD DURING WHICH MOVEMENT WAS RECORDED	5/6 - 5/12 to to 5/7 5/13	6/6 - 6/10	8/9 - 8/13	10/3 - 10/6
Number of days	4	5	5	4
TOTAL DISTANCE TRAVELED (Miles)	0.6	3.6	7.6	10.3
Maximum distance traveled in 12 hours	-	0.7	1.7	3.4
Maximum distance traveled in 24 hours	0.3	1.1	3.4	5.4
Minimum distance traveled in 24 hours	0.1	0.1	0.8	1.9
AVERAGE DISTANCE TRAVELED 24 HOURS (Miles)	0.15	0.72	1.52	2.58

Fig. 23. Daily movements of elk No. 5 during different seasons. Curved portions of lines indicate elk was under visual observation.

Fig. 24. Daily movements of elk No. 6 and center of activity within her fall range. Curved portions of lines indicate elk was under visual observation.

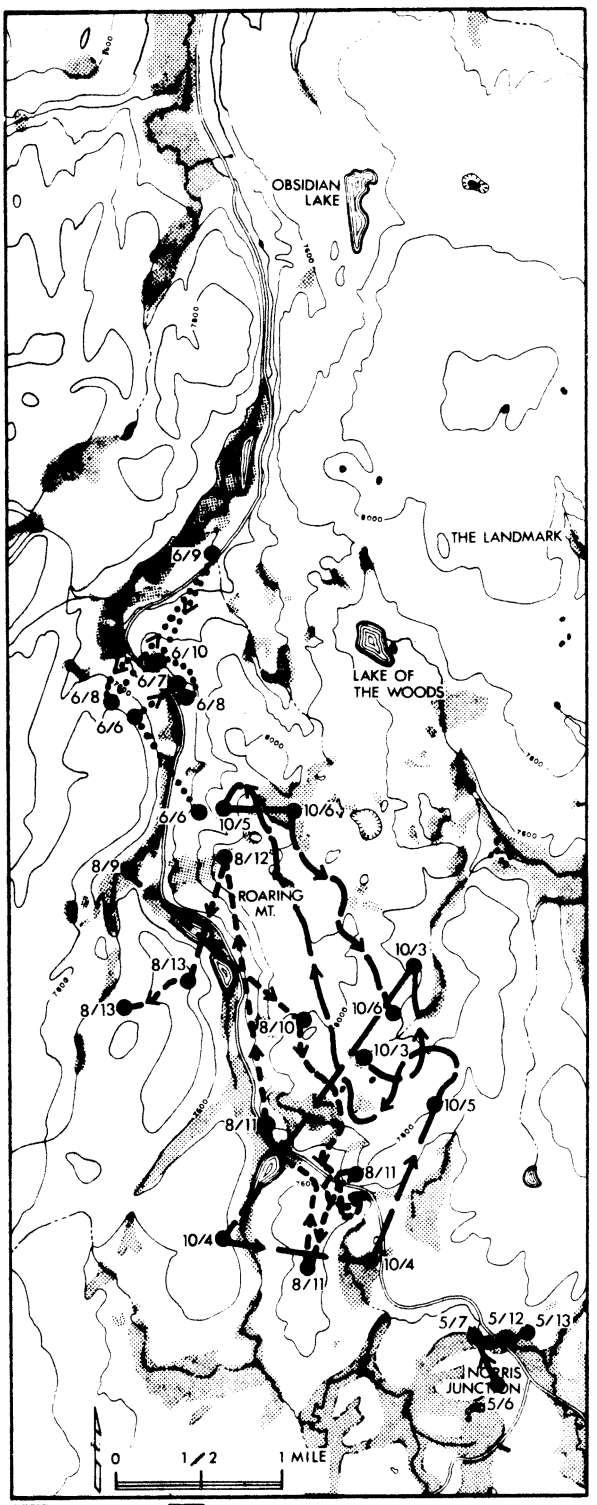
OBSIDIAN LAKE
THE LANDMARK
LAKE OF THE WOODS
ROARING MT.
NORRIS JUNCTION
6/9
6/10
6/7
6/8
6/6
10/6
10/5
8/12
8/9
8/13
10/3
8/10
10/6
8/11
10/4
5/7
5/12
5/13
5/6
0
1/2
1 MILE
TIMBER
OPENINGS
EARLY SPRING
SPRING
SUMMER
FALL

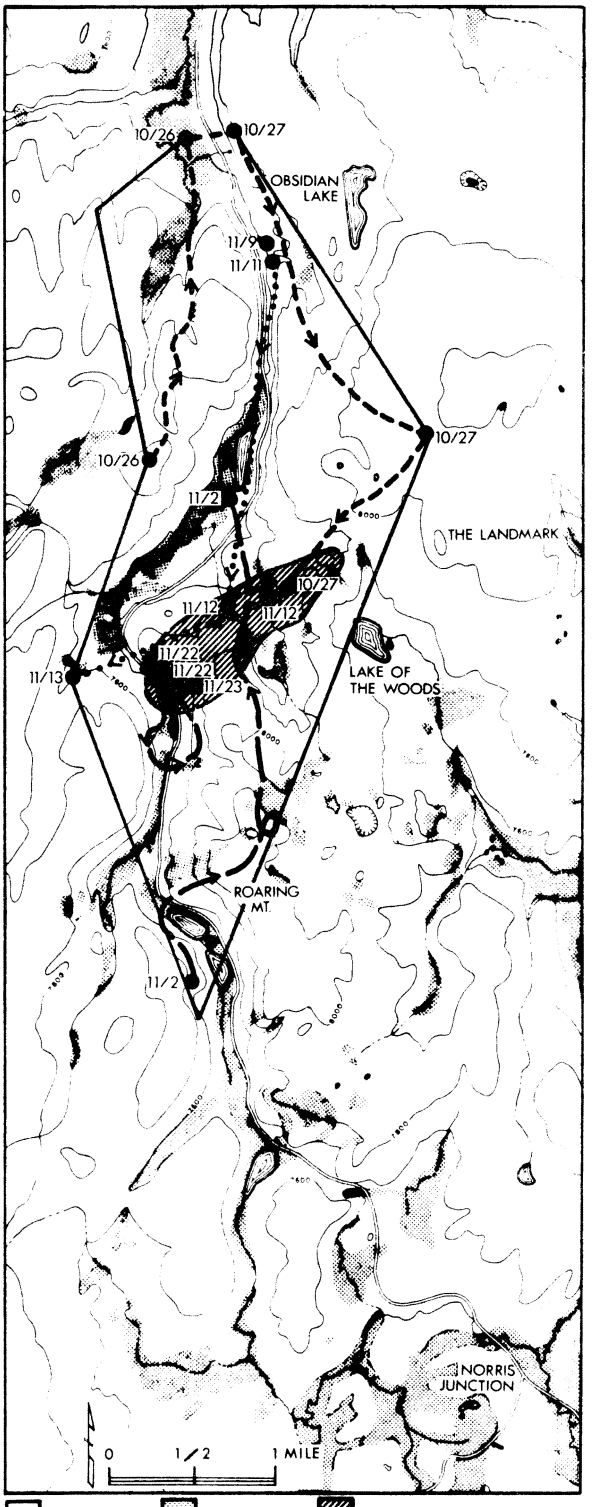
OBSIDIAN LAKE
THE LANDMARK
LAKE OF THE WOODS
ROARING MT.
NORRIS JUNCTION
10/26
10/27
11/9
11/11
11/2
11/12
11/22
11/23
11/13
0
1/2
1 MILE
TIMBER
OPENINGS
CENTER OF ACTIVITY
1 DAY MOVEMENTS
2 DAY MOVEMENT
5 DAY MOVEMENT

weight lost in winter; snow was no longer a barrier to travel and new forage was rapidly becoming available. In summer the average distance traveled increased to 1.52 miles and was correlated with vertical movements for forage and movements related to harem formation. In fall, the average daily movement of 2.58 miles was related to breeding activity, and the break-up of harems. Movement increased as the seasons progressed from early spring through the fall period and is reflected in the size of seasonal ranges (Fig. 15). The extent to which movement induced by the observers may have masked natural movement cannot be precisely determined, but it is known that induced movement was slight and probably can be disregarded in any interpretation of daily movements.

During 1965, the home range of elk No. 6 was about 12 square miles and overlapped the home range of No. 5, who belonged to a different harem (Fig. 16). Range overlap occurred mostly during the fall. One- two- and five-day movements of elk No. 6, within her fall range, are shown in Fig. 24. In relatively short periods of time, No. 6 traversed most of the land area she occupied in fall. These longer movements appeared to be related to the break-up of the harem. Earlier, during the period of active breeding (Sept. 3 - Oct. 20), her activities were mainly confined to the center of activity as shown in Fig. 24 and no extensive movement was recorded. Fourteen of 21 days (67%) that this elk was located by radio during the fall period, she was within the area designated center of activity. This area comprised less than 10% of her total fall range.

During Winter, deep snow so restricted the movements of elk that no instrumented animals in either study area moved a distance of more than an airline mile within a 24-hour period. The average daily movement was less than 1/4 mile and on some days movement did not exceed a few hundred yards. The longest movements occurred along the drainages between thermal areas. Movements from the relatively snowfree thermal areas into the deep snow of the lodgepole forest occurred almost daily. These movements were to feed, and the elk seldom bucked the 4 - 5 foot snow cover for more than 300 yards. The small winter ranges and restricted centers of activity of all instrumented elk (Figs. 11, 12, and 22) illustrate how effectively deep snow limited their movements.

Activity: During 1965, we recorded two 24-hour activity patterns for two different elk (3 and 2); and in 1966, seven individual elk (3, 5, 6, 7, 8, 9, 10) were located by radio and observed during 17, 24-hour periods. The percentage of time during 1966 that elk were engaged in four major activities of feeding, bedding, traveling and standing are recorded in Table 5 and Fig. 25.

Feeding included grazing and browsing; bedding and ruminating frequently occurred simultaneously. Standing included periods of ruminating as well as nursing, communicating and alertness. Traveling was direct movements to bedding or feeding areas or responses to threat stimuli. Traveling did not include movements made while grazing or browsing. Data for seven elk recorded in Table 5 show

Table 5

Activity of Elk Recorded During Continuous 24-Hour Periods of Radiotracking

1966

Elk No.	No. 24-Hour Periods	Starting Dates	Activity: Feeding Hours	Feeding %	Bedding Hours	Bedding %	Traveling Hours	Traveling %	Standing Hours	Standing %	Total Hours	Total %
3	2	2/25) 2/26)	15.5	32.3	30.3	63.1	2.0	4.2	0.2	0.4	48.0	100.0
5	3	2/26) 3/4) 8/10)	23.8	33.1	43.0	59.7	1.1	1.5	4.1	5.7	72.0	100.0
7	3	2/25) 2/26) 3/4)	30.6	42.5	36.9	51.3	2.9	4.0	1.6	2.2	72.0	100.0
6	1	4/25)	14.3	59.6	9.7	40.4	-	-	-	-	24.0	100.0
8	3	3/28) 4/13) 4/25)	38.0	52.8	28.5	39.6	4.5	6.2	1.0	1.4	72.0	100.0
9	4	8/15 8/17) 8/23) 9/1)	47.6	49.6	27.2	28.3	16.1	16.8	5.1	5.3	96.0	100.0
10	1	10/21)	10.8	45.0	11.3	47.1	0.6	2.5	1.3	5.4	24.0	100.0
Total Hours			180.6		186.9		27.2		13.3		408.0	
Total Percent				44.3		45.8		6.7		3.2		

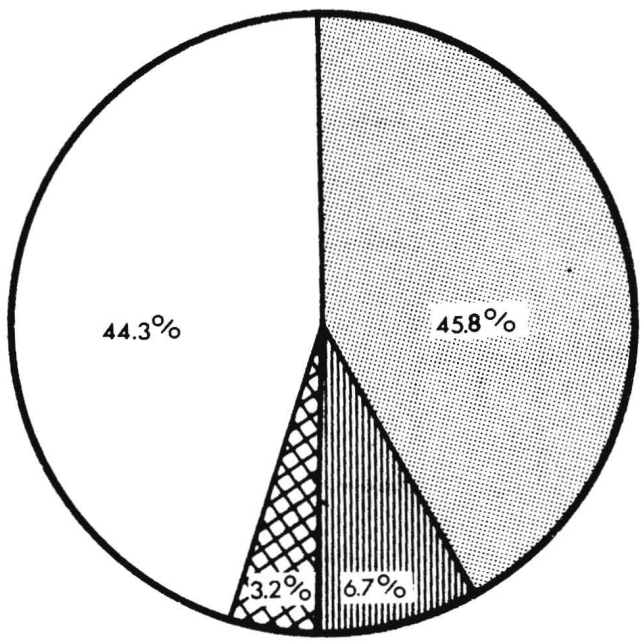

TIME — HOURS

FEEDING	180.6
BEDDING	186.9
TRAVELING	27.2
STANDING	13.3
TOTAL	408.0

Fig. 25. Composite time budget of seven female elk derived from seventeen 24-hr. activity patterns.

considerable variation in bedding and feeding activity of individual elk but the composite data suggest that, in general, cow elk spend equal amounts of time feeding and bedding and that when they are not engaged in these two activities, they usually are moving within their home ranges.

Instrumented elk tended to spend more time bedding than feeding in winter. This was probably due to the scarcity of palatable food and the need to conserve energy. In spring, feeding activity increased in response to new food sources and nutritional requirements (Table 6). Feeding and bedding occupied equal periods of time in summer; feeding activity tended to increase again in fall. Time spent traveling was highest in summer; this coincides with movements of elk into timbered areas and with the formation of harems in late summer. Cow elk are relatively sedentary in fall until the break-up of harems. Our observation of instrumented elk for periods of less than 24 hours supports the 24-hour seasonal activity data presented in Table 6.

Feeding: While observing instrumented elk to obtain 24-hour activity patterns, we related feeding activity to major habitat types. During winter, elk spent 48% of their feeding time in ice-free marshes, 33% in the lodgepole forests and over 18% in the thermal areas (Table 7). Streams and seepage areas, warmed from thermal waters, formed marshes and enabled sedges to grow slowly, but steadily, throughout the winter.

Table 6

Summary of 24-Hour Activity Patterns by Seasons

1965 - 1966

Season	Designation of Instrumented Elk	Total Hours Observed	No. of 24-Hour Periods	Percent Activity				
				Feeding	Bedding	Traveling	Standing	Total
Winter	3, 7, 5	168	7	38.5	56.1	3.6	1.8	100.0
Spring	6, 8	96	4	54.4	39.8	4.7	1.1	100.0
Summer	9, 5, 3	144	6	40.4	41.0	13.1	5.5	100.0
Fall	10, 3	48	2	53.0	41.0	3.3	2.7	100.0
Total		456	19					

Table 7

Feeding Activity of Elk Related to Habitat and Season

From 24-Hour Activity Data

1966

Season	Elk Nos.	Percent Time Habitat Was Utilized					Total Hours Observed Feeding
		Lodgepole	Marsh	Thermal Areas	Meadows	Total	
Winter	8	33.0	48.4	18.6	----	100.0	36.6
Spring	6 & 8	35.2	63.2	1.6	----	100.0	81.6
Summer	9	44.8	----	----	55.2	100.0	47.5
Fall	10	----	----	----	100.0	100.0	10.8
Annual		35.2	39.3	4.6	20.9		176.5

Thermal areas are normally dry, but the ground is warmed by underground thermal activity; except immediately after winter storms, these areas are snow-free. Vegetation is scarce but some plant species grow throughout the winter; all thermal areas are heavily overgrazed (Fig. 26).

In spring, the marshes receive even heavier use by elk (63%) than they do during winter; it was common to see elk feeding on sedge shoots in 4-6 inches of water. Elk continued to feed in the lodgepole stands during spring, but they shifted their diet from lodgepole browse and mistletoe (Arceuthobium americanum Nutt) to shrubs and emerging grasses and forbs.

In summer, the open grass meadows received 55% of the feeding activity, and forbs and browse (especially Vaccinium spp.) in lodgepole forest were heavily used (Fig. 27).

The percentages of annual feeding activity associated with the four major habitats shown in Table 7 does not illustrate the relative year-long and seasonal importance of these habitats to elk of the Madison Drainage herd. The use of meadows in spring and lodgepole forests in fall is greater than indicated. Feeding activity recorded during short, diurnal periods of radiotracking over a 5-year period and analysis of more than 8,000 occurrences of unmarked elk in the four habitat types suggest greater year-long use of these two habitats than the data in Table 7 indicate. The comparative importance of the four habitats is perhaps academic since all four habitat types appear to be vital to the elk population.



Fig. 26. Cow and calf elk feeding on mosses, lichens and bunchgrasses exposed in a thermal area. Note the heavily overgrazed conditions.

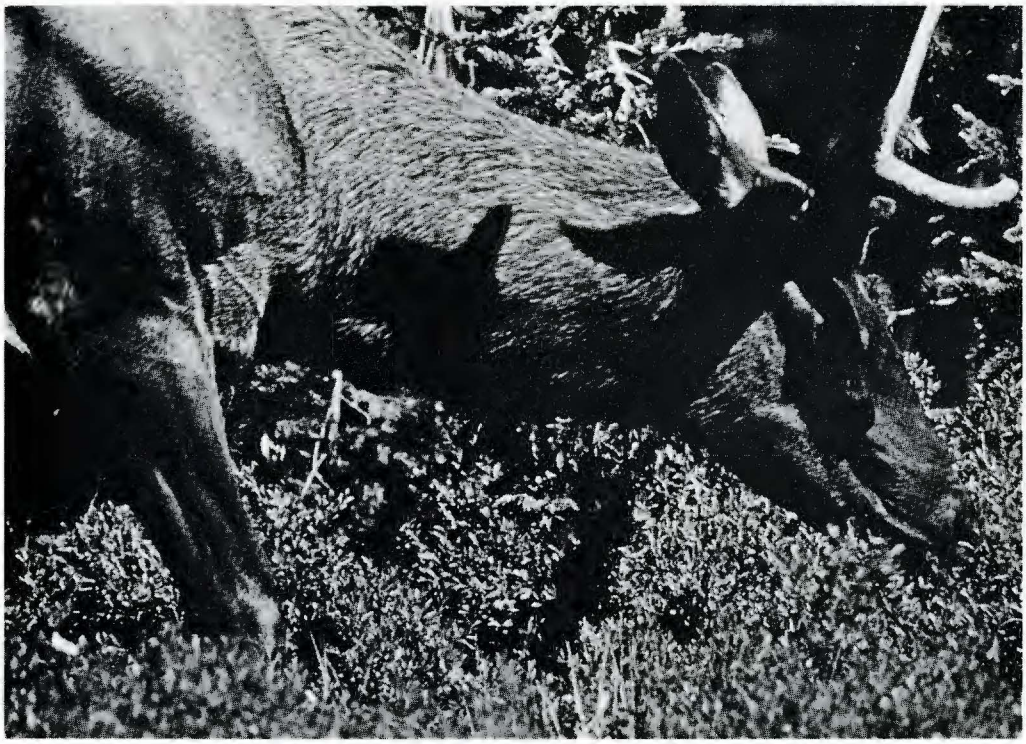

Fig. 27. Bull elk feeding on Vaccinium. V. membranaceum and V. scopularum were heavily utilized in summer but unavailable in winter due to snow depth.

Bedding: The 24-hour activity patterns revealed that elk bedded 46% of the time (Fig. 25). In winter, instrumented elk spent over half of their time bedded down; during summer, over 1/3 of the total time was spent in beds. Winter bedding is a means of conserving energy and combating the stress of cold weather and limited food supply. While engaged in this activity, they used lodgepole to a greater extend than other habitat throughout the year (Table 8). Marshes were used heavily in spring because food was availabe there, and they were snow-free weeks ahead of the lodgepole forests. Elk bedded on the warm ground in thermal areas and sought such places for bedding during storms and periods of low temperatures (-20 to -40° F.). On one occasion, a bull elk fell into the Firehole River following immobilization. He was thoroughly drenched for about an hour and in a state of hypothermia. We had little hope that he could survive the subzero weather; at nightfall he appeared unable to rise. During the night, he moved $\frac{1}{4}$ mile to a dry thermal area where we found him the next day apparently fully recovered. During fall, the meadows were favored bedding areas; during inclement weather, elk bedded in the lodgepole.

Diurnal-Nocturnal Activity: Conventional as well as motion sensing transmitters made it possible to compare activities of cow elk during daylight and darkness (Table 9). Five 24-hour activity patterns for summer and five for winter were compared to determine diurnal-nocturnal differences in activities.

Table 8

Bedding Activity of Elk Related to Habitat and Season

From 24-Hour Activity Data

1966

Season	Elk Nos.	Percent Time Habitat Was Utilized					Total Hours Observed Bedding
		Lodgepole	Marsh	Thermal Areas	Meadows	Total	
Winter	8	50.0	32.0	18.0	----	100.0	19.4
Spring	6,8	59.6	35.1	5.3	----	100.0	46.5
Summer	9	47.6	----	----	52.4	100.0	27.3
Fall	10	----	----	----	100.0	100.0	11.3
Annual		48.2	21.5	5.7	24.6		104.5

Table 9

Comparison of Diurnal-Nocturnal Activity
of Instrumented Elk
During Winter and Summer

	Winter			Summer		
Activity	Diurnal	Nocturnal	Total	Diurnal	Nocturnal	Total
Feeding	27.0	17.0	44.0	34.3	18.6	52.9
Bedding	21.5	48.9	70.4	19.5	23.6	43.1
Traveling	2.7	.4	3.1	13.6	5.3	18.9
Standing	1.3	1.2	2.5	5.1	0.0	5.1
Total Hours	52.5	67.5	120.0	72.5	47.5	120.0
Percent	44	56		60	40	

10-24 hr. activity patterns
Elk No. 3, 5, 7, 9

5 patterns - summer
5 patterns - winter

longer day summer
shorter day winter

During both seasons, instrumented elk fed more during the day than at night. There were slight seasonal differences in the amounts of time spent feeding during the hours of daylight and darkness, with the elk feeding comparatively more during the day in summer; however, if the comparative length of days and nights were taken into consideration, the differences would be reversed and the elk actually fed less per hour of darkness during winter than summer.

During both seasons, elk bedded much more at night than during the day. Diurnal-nocturnal differences between the two seasons were large; elk spent most of the hours of the long winter nights bedded, but only about half of the nocturnal hours were spent in beds during summer.

During both winter and summer, more time was spent traveling during the day than at night. About six times as many hours were spent traveling during summer as in winter.

Individual Activity Patterns.

Adult cow elk were found to be highly individualistic in their daily movements and associations with other members of their band. No strong or enduring associations were recorded. Associations between recognizable cow elk appeared to be governed by chance or by factors other than sociability. This study was not designed to investigate conspecific associations but our observations indicated that the number of joint associations and thus, the degree of social cohesiveness that exists among elk could be studied with instrumented animals.

The 24-hour activity patterns also suggest that elk are highly individualistic in such basic activities as feeding, bedding and moving, but tend to conform to herd patterns. Two patterns recorded for elk No. 5 during winter show considerable variation in activity (Fig. 28). Similarly, two patterns recorded for different elk (Nos. 5 and 9) from the same herd, during the same season but in different years, show very different activity sequences (Fig. 29).

Two consecutive 24-hour patterns for elk No. 3 between 25 and 27 Feb. are very dissimilar from one 24-hour period to the next (Fig. 30). Dissimilarity or lack of any sequence or repetitive pattern in 24-hour activity patterns prevailed. No doubt this was partially due to small sample size, however, similar activity patterns for the same and for different elk were recorded for members of two different bands. The pattern for elk No. 3 recorded on 26 and 27 Feb. is very similar to a pattern recorded for elk No. 5 of the same band during the same period. Feeding and bedding activities conform very closely in time and in duration (Fig. 31). Activity patterns for two different elk (No. 6 and 8) were very similar when these two animals were associated during the same 24-hour period (Fig. 32). The data suggest that individual activity patterns of elk of the same herd for the same time period tend to be similar. A larger sample of 24-hour activity patterns should reveal the relative importance of individual behavior and gregarious behavior in shaping elk activity patterns and evolving their social structure.

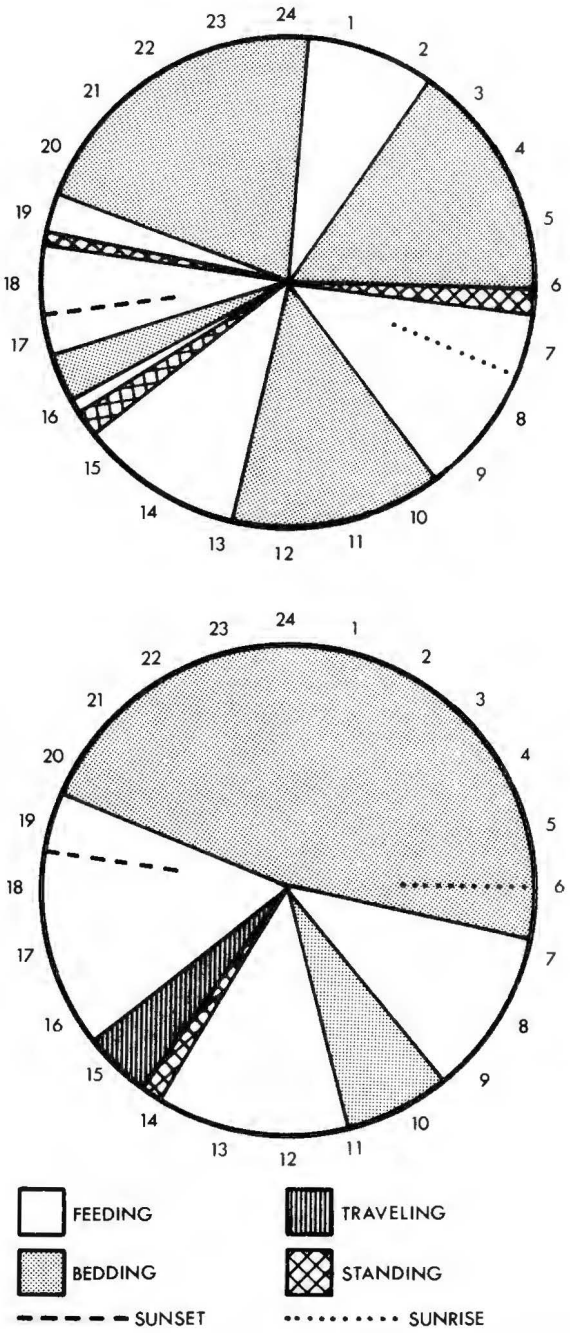

Fig. 28. 24-hr. activity patterns of elk number 5 during winter.

Top: (2/26-27/1966).
Bottom: (3/4-5/1966).

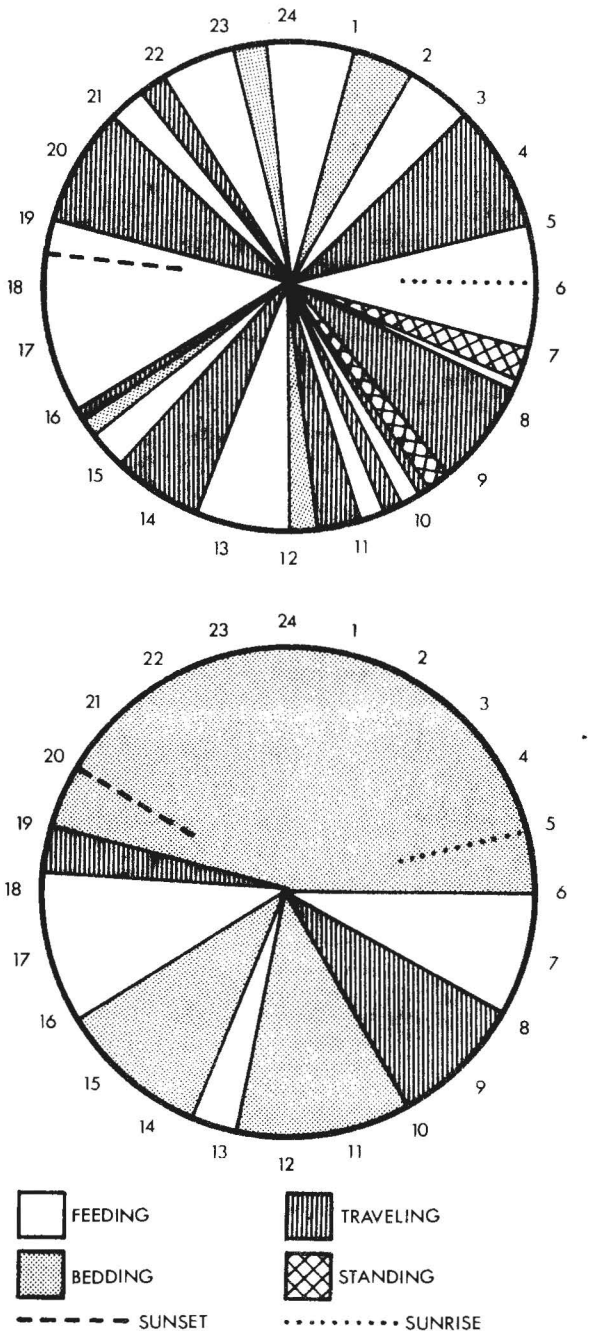

Fig. 29. 24-hr. activity pattern of elk numbers 5 and 9 during summer.

Top: No. 9 (9/1 & 2/1966).
Bottom: No. 5 (8/10-11/1965).

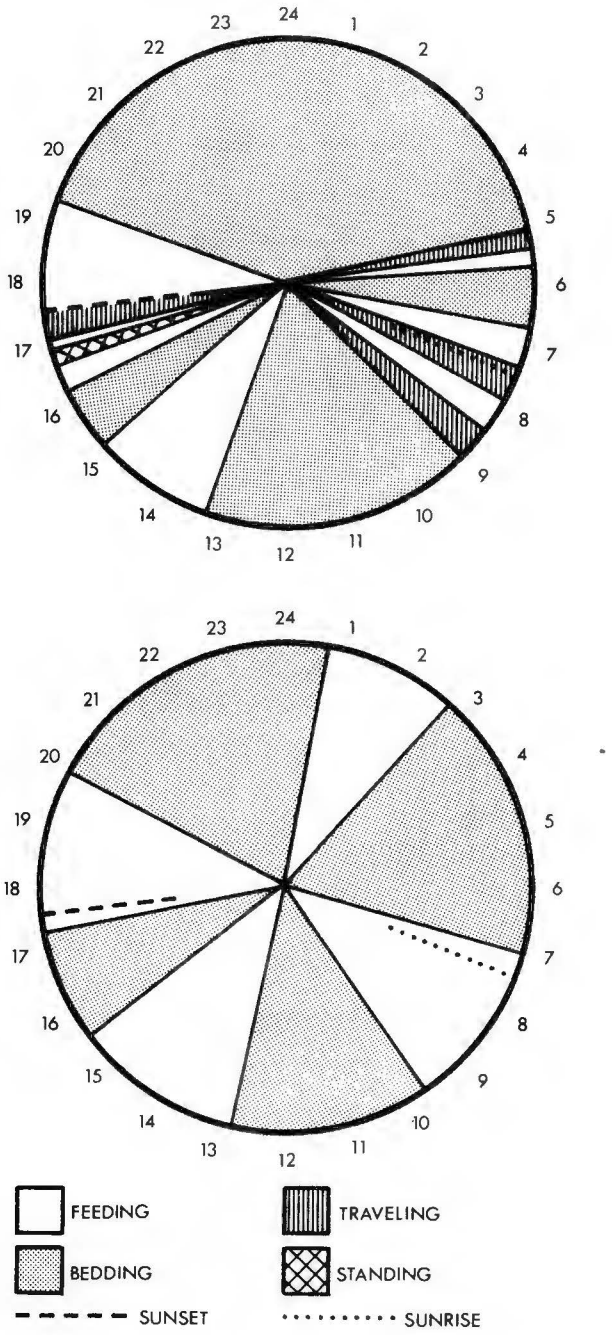

Fig. 30. 24-hr. activity patterns of elk number 3 during winter.

Top: (2/25-26/1966).
Bottom: (2/26-27/1966).

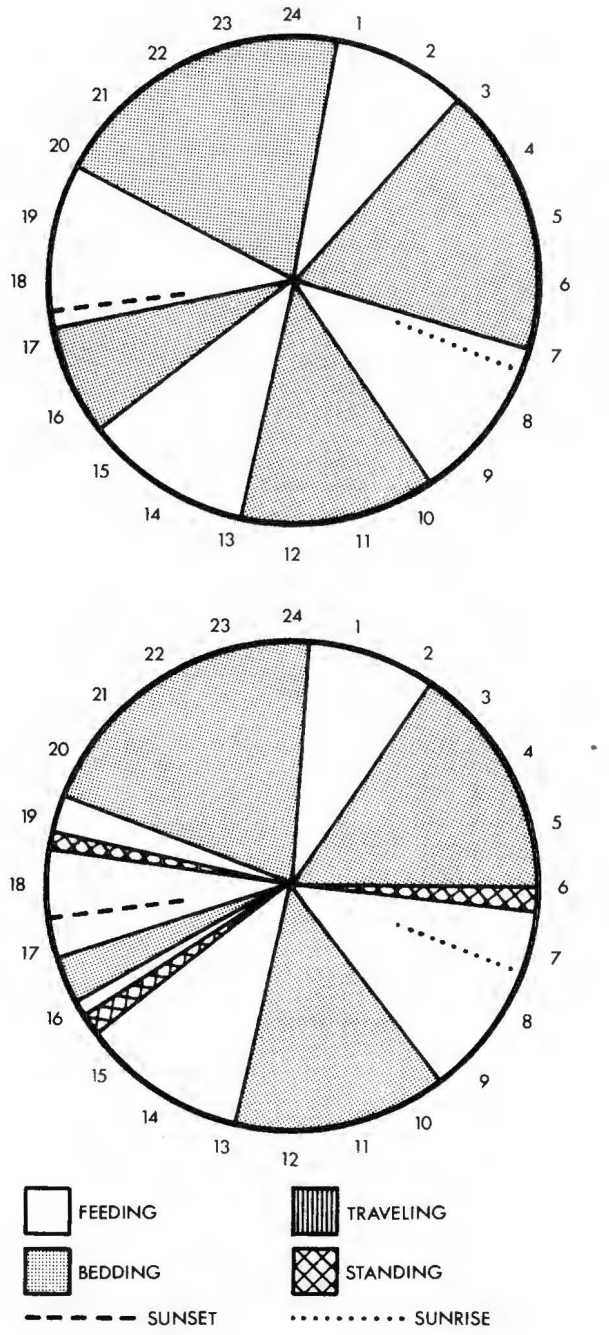

Fig. 31. 24-hr. activity patterns of elk numbers 3 and 5 during winter -- same day (2/26-27/1966), same herd.

Top: No. 3. Bottom: No. 5.

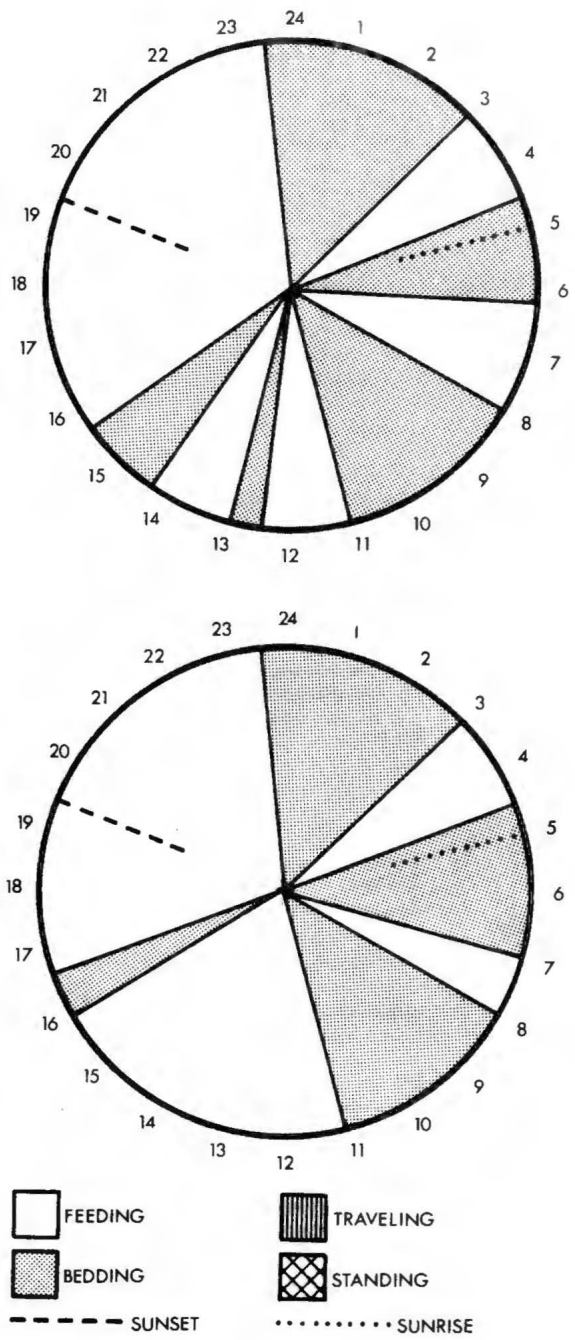

Fig. 32. 24-hr. activity patterns of elk numbers 6 and 8 during spring -- same day (4/25 & 26/1966), same herd.

Top: No. 8. Bottom: No. 6

Fig. 33 shows three activity patterns recorded for elk No. 9 between 15 - 24 Aug. Fig. 29 also shows a 24-hour activity pattern for this elk on 1 and 2 Sept. A characteristic common to all four patterns is that feeding and bedding periods are numerous, interspersed and of short duration. Elk No. 9 traveled frequently throughout the four 24-hour periods. She was more restless than other animals in her band and her restless temperament is reflected in her activity pattern. In other words, the pattern appears to be rather specific for this particular animal.

A composite time budget for the 96 hours recorded in the four 24-hour patterns for elk No. 9 is shown in Fig. 34. A comparison of this time budget with the time budget for all instrumented elk (Fig. 25) shows that elk No. 9 bedded less and traveled more than the average for all elk.

Table 10 compares the number of activity periods for elk 3, 5, 8 and 9. Elk No. 9 exhibited more periods of feeding, bedding, traveling and standing during 72 hours of observation than any of the other instrumented animals. The activity patterns for individual elk are too few in number to reveal sequences or cycles of activity. However, they do suggest that the elk social system may be a melding of solitary and gregarious behavior. There probably is survival value for a species that can act individually or gregariously as circumstances require.

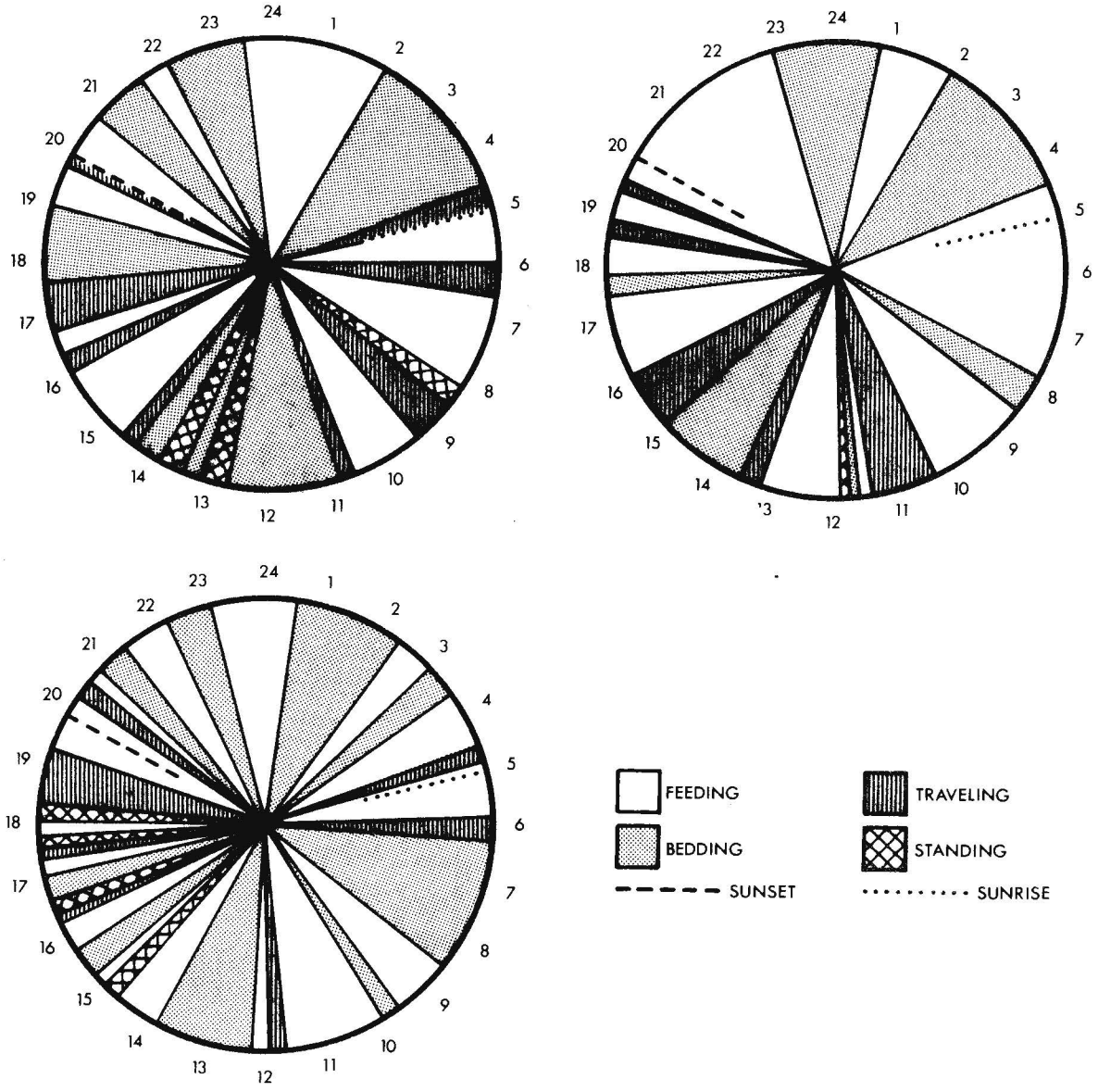

Fig. 33. Three 24-hr. activity patterns of elk number 9 during summer.

Top Left: (8/15-16/1966).
Bottom: (8/17-18/1966).
Top Right: (8/23-24/1966).

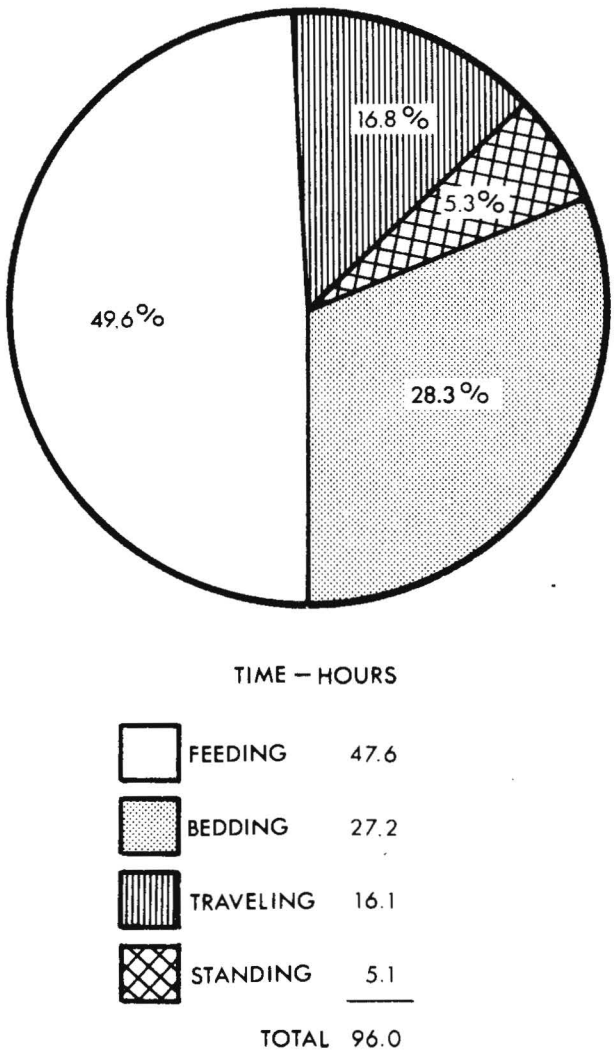

Fig. 34. Composite time budget for elk number 9 during summer -- derived from four 24-hr. activity patterns.

Table 10

Activity Periods of Individual Elk

Elk No.	No. 24-Hour Patterns	Feeding		Bedding		Traveling		Standing		Total No. Periods	Average No. Periods	Total Hours
		No. Periods	No. Hours	No. Periods	No. Hours	No. Periods	No. Hours	No. Periods	No. Hours			
3	3	15	30.0	12	38.8	5	3.0	1	0.2	33	11.0	72
5	3	12	23.8	9		3	3.9	4	1.3	28	9.3	72
8	3	14	38.0	10	28.5	4	4.5	3	1.0	32	10.7	72
9	3	33	35.8	28	24.9	20	6.9	8	4.4	84	28.0	72

Migration:

Data from the instrumented and color-marked elk in the two study areas showed that these elk did not migrate.

A radio collar placed on elk No. 8 on 4 Mar. 1966 at Old Faithful was removed 25 June 1970. The radio became inoperative after 86 days (Table 1) but during the 5-year period, the elk was sighted and recognized by her color-coded collar on 26 occasions. Each of these identifications, including the removal of the collar, occurred withing the home range, which was established during the time she was instrumented. Similar identifications of other marked elk were made following the 1965-66 intensive period of investigation, but none were made outside of the areas earlier defined as seasonal or home ranges (Table 2 and 3, Figs. 35 and 36). However, observed movements of other elk inhabiting the Gibbon, Firehole and Madison River drainages, track counts and discovery of migratory trails indicated that some members of the Madison Drainage herd did migrate. A gradual build-up of elk at Duck Creek and Cougar Creek (Fig. 37) during each winter also suggested that some elk were migrants.

Cow elk No. 12, instrumented at Norris during the summer of 1968 in order to record body temperatures, was observed twice during the winter of 1968-69 near the confluence of Duck and Cougar Creeks, outside the west boundary of Yellowstone National Park by Dick Koelzer (per. comm.). Prior to this sighting we recorded her, on 23 Aug. in the Norris study area. She probably migrated westward from Norris

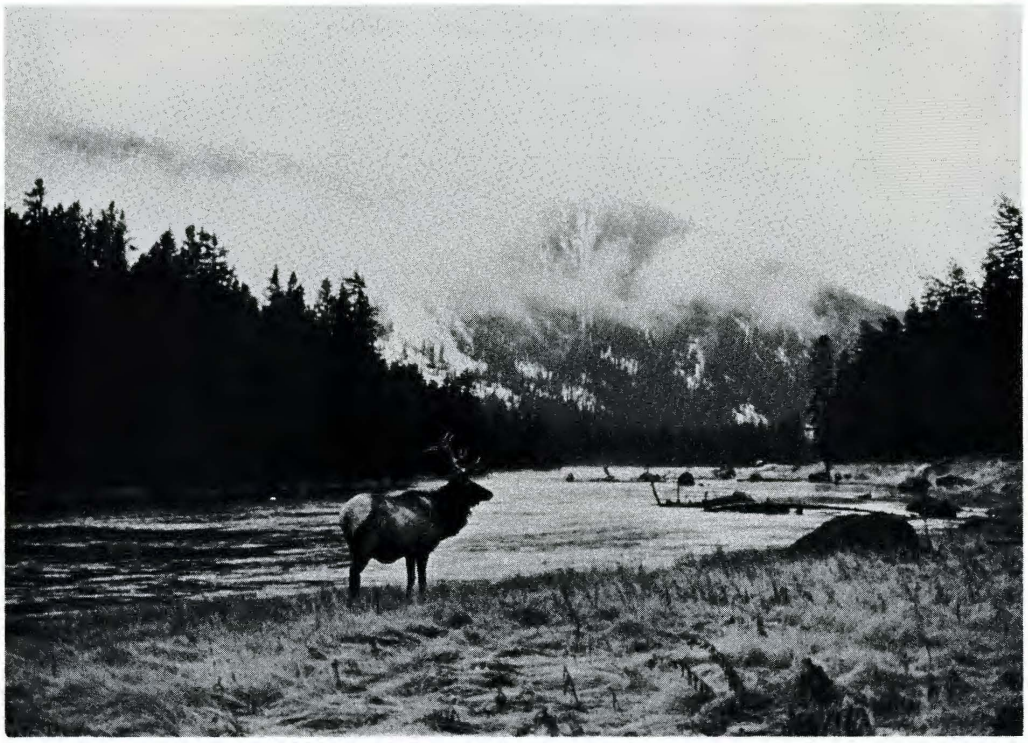

Fig. 35. Elk of the Madison Drainage Herd are largely nonmigratory.



Fig. 36. Home and seasonal ranges were defined from radio fixes and locations. Color marked elk associated with instrumented elk were also studied.

Fig. 37. Migratory routes of elk which winter in the Duck-Cougar Creek area. Solid lines represent observed movements; broken lines represent infered movements of elk which were observed on Duck Creek after being collared in Jackson Hole, Wyoming and in the Gallatin Canyon, Montana, by Wyoming and Montana biologists.

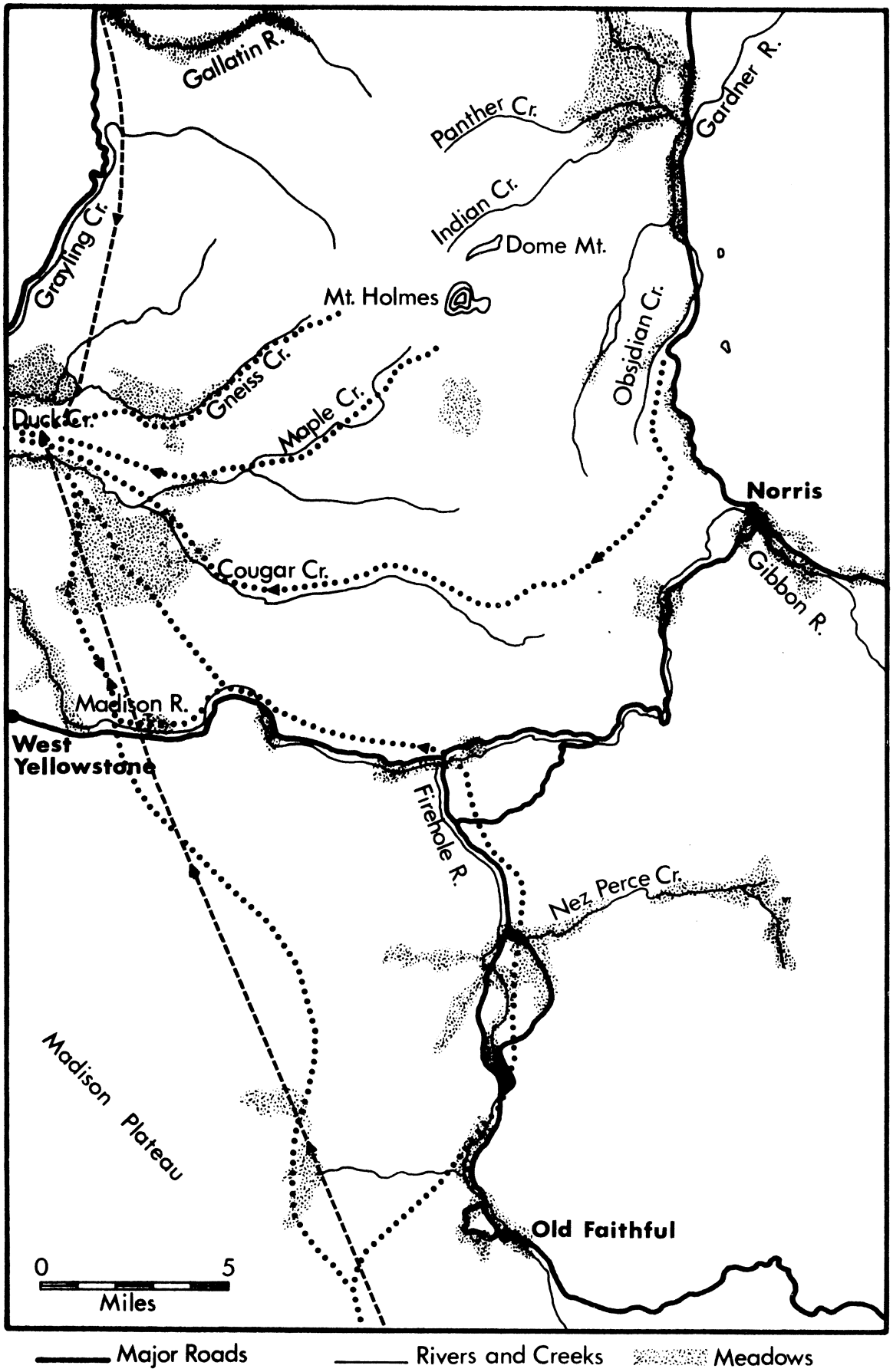
Gallatin R.
Panther Cr.
Gardner R.
Indian Cr.
Grayling Cr.
Dome Mt.
Mt. Holmes
Obsidian Cr.
Gneiss Cr.
Maple Cr.
Duck Cr.
Norris
Cougar Cr.
Gibbon R.
Madison R.
West Yellowstone
Firehole R.
Nez Perce Cr.
Madison Plateau
Old Faithful
0
5
Miles
Major Roads
Rivers and Creeks
Meadows

to the head of Cougar Creek and then down that drainage to the Cougar Creek-Duck Creek winter range (Fig. 37).

Field observations, aerial counts and surveys made during the spring of 1969 and 1971 showed that some of the Duck Creek-Cougar Creek elk do, in fact, migrate up and down the Madison River drainage as well as onto the Madison Plateau.

Sightings of 2 collared elk from the Gallatin Valley herd at Duck Creek during the winter of 1968-69 by Dick Koelzer and two during the winter of 1970-71 by Roland Whitman (pers. comm.) suggest some exchange between the Gallatin and Madison Drainage herds. During the spring of 1971, we observed one of these collared animals migrating up the Madison River accompanied by other elk that had wintered in the Duck Creek-Cougar Creek area. They migrated southeast to the Madison River and up the drainage where their identity was lost among the nonmigratory elk.

On 10 Jan. 1970, Dick Koelzer counted 243 elk from the air on the Duck Creek-Cougar Creek winter range. On 12 Mar., 127 of these were still in the area, the balance of the herd had moved eastward up the Madison River Valley.

From ground and aerial counts made during the winter of 1970-71, we estimated that approximately half of the Duck Creek-Cougar Creek herd migrated up the Madison.

In the spring of 1969, two elk collared in Jackson Hole, Wyoming, approximately 95 airline miles away, were observed at Duck Creek by Dick Koelzer and in the winter of 1970, two were observed by

Dave Stradley (pers. comm.).

We believe most of the elk wintering at Duck and Cougar Creeks come from the Madison Drainage herd and from a small scattered population that moved up and down Maple, Gneiss and Cougar Creeks (Fig. 37). However, there are also movements from the Gallatin and Jackson Hole herds as evidenced by collared elk observed at Duck Creek.

Our data for the winter of 1970-71 indicate that perhaps half of the elk that wintered at Duck and Cougar Creeks were members of the Madison drainage herd. If this estimate is correct, it means that approximately 18 -- 20% of the elk composing the Madison drainage herd are migrants. This is the reverse of the situation we found in the other elk herds utilizing Yellowstone National Park (Craighead et al. in press A).

The Duck Creek-Cougar Creek elk should be marked on the winter range so that their movements can be precisely followed and the various herd components recognized. Historical data suggest that this winter herd was much larger prior to the construction of Hebgen Dam on the Madison River in 1915. Formerly, many elk migrated down the Madison River to areas where the winters are less severe. Thermal springs at Duck Creek and Cougar Creek enable elk to survive on a typical winter range (Fig. 38); like the Norris and Old Faithful elk bands, they subsist principally on sedges and aquatic plants, especially during severe winters.



Fig. 38. Warm-water streams and marshes in the Duck Creek-Cougar Creek area enable elk to winter in otherwise deep snow conditions. (Photo by Dick Koelzer)



Fig. 39. Lodgepole pine, throughout the upper Madison River drainage, is heavily parasitized with mistletoe. Normally elk were forced into deep snow areas to feed on this forage.

Winter Food Habits:

The extremely small winter ranges of elk in the Norris and Old Faithful areas posed a question concerning how these elk met their nutritional needs.

Lodgepole pine is the most abundant and available browse in the two areas. However, this forage is not highly palatable to elk, probably due to the turpenes. Feeding trials (Boll 1958, Geis 1954) showed that penned elk cannot survive a winter on a ration composed largely of lodgepole pine, but can survive without excessive weight loss on a combination diet of conifer and other browse. An adequate daily food allowance for cow elk was computed by Geis (op. cit.) to be 2.2 lbs of air-dry forage per hundred pounds of live weight.

Within Yellowstone National Park, deciduous browse is not available on the winter range of the Madison Drainage elk herd. The grasses and forbes are so heavily utilized by both elk and bison (Bison bison L.), that these forage classes cannot supply even a small fraction of the approximately 10 - 12 lbs of air-dry forage which is required daily by adult cow elk.

Close observation showed that instrumented animals subsisted on a rather unique diet. Dwarf mistletoe, a parasite on lodgepole pine (Figs. 39 and 40), sedge shoots growing throughout the winter along the banks of the warm thermal streams, and milfoil (Myriophylum spp.) and mare's-tail (Hippuris vulgaris L.)



Fig. 40. Elk selectively feeding on mistletoe.

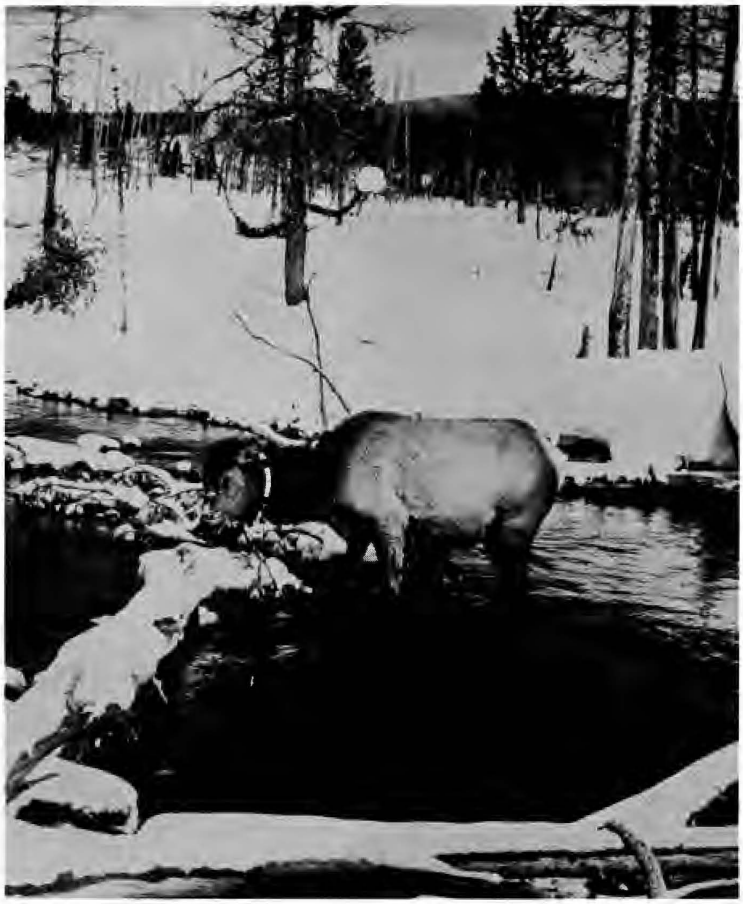

Fig. 41. Elk feeding on aquatic vegetation.

found in the larger streams and rivers, were important constituents of the winter diet of all elk (Fig. 41). Chemical analyses of these and other forage plants which are used in winter appear in Table 11. The high protein content of these foods indicates how elk survive the severe winters of the study areas within very restricted winter ranges. When elk browsed on lodgepole pine, they selected mistletoe. Some elk fed almost daily on aquatic plants, while others used them sparingly. All elk grazed the tender sedge-shoots which were a preferred food. The dwarf mistletoe was heavily browsed in 1965 when snow depth was above average. This may have been a choice dictated by availability rather than palatability.

Typical foods of northern Yellowstone elk are also shown in Table 11. When the chemical composition of these foods are compared with the diet of the Norris and Old Faithful elk, it becomes apparent that the atypical diet is considerably higher in protein.

Because a mixed diet of lodgepole, mistletoe, aquatic plants and sedges forms a combination diet that is nutritious, the elk population has been able to maintain itself in spite of severe climatic conditions and the overgrazed grasses and forbes. However, by spring, these animals are in varied states of malnutrition. Growth of sedges throughout the winter provides a renewable food source. Elk graze the emerging sedge shoots in the warm water marshes and along the streams (Fig. 42). The amount of time elk spend

Table 11

Chemical Analyses of Some Forage Species Used by Elk as Food*

Sample	% Protein	% Ether Extract	% Ash	% Crude Fiber	% P.	% Ca.	mg./g Carotene
NORRIS AND OLD FAITHFUL AREAS							
Dwarf Mistletoe	8.3	7.6	3.6	17.2	.21	.16	9.3
Lodgepole Pine	6.6	9.5	2.1	26.2	.09	.20	27.2
Mixed Grasses	6.0	1.7	14.3	32.0	.03	.23	16.3
Sedge (Mature)	4.4	0.7	45.3	14.7	.07	.23	4.5
Sedge (Shoots)	18.2	2.4	6.6	31.1	.19	.25	15.4
Lichen (Usea sp.)	4.6	4.0	3.6	5.7	.08	.12	4.5
Milfoil	13.9	0.7	18.3	15.8	.16	1.50	1.4
Mare's Tail	16.0	0.9	39.6	10.9	.22	8.77	4.1
NORTHERN YELLOWSTONE AREA							
Douglas Fir	6.1	8.5	3.6	16.1	.13	---	----
Meadow Hay[1]	4.1	1.8	5.9	28.6	.13	.42	20.2
Bunch Grass[2]	3.3	1.6	7.8	37.9	.06	.31	1.0
Willow	6.6	9.5	3.1	28.2	.13	1.48	4.0

*Tests conducted by the State Agricultural Experiment Station, Bozeman, Montana.

[1]Summer, [2]Early Spring, all other samples were collected in the winter.

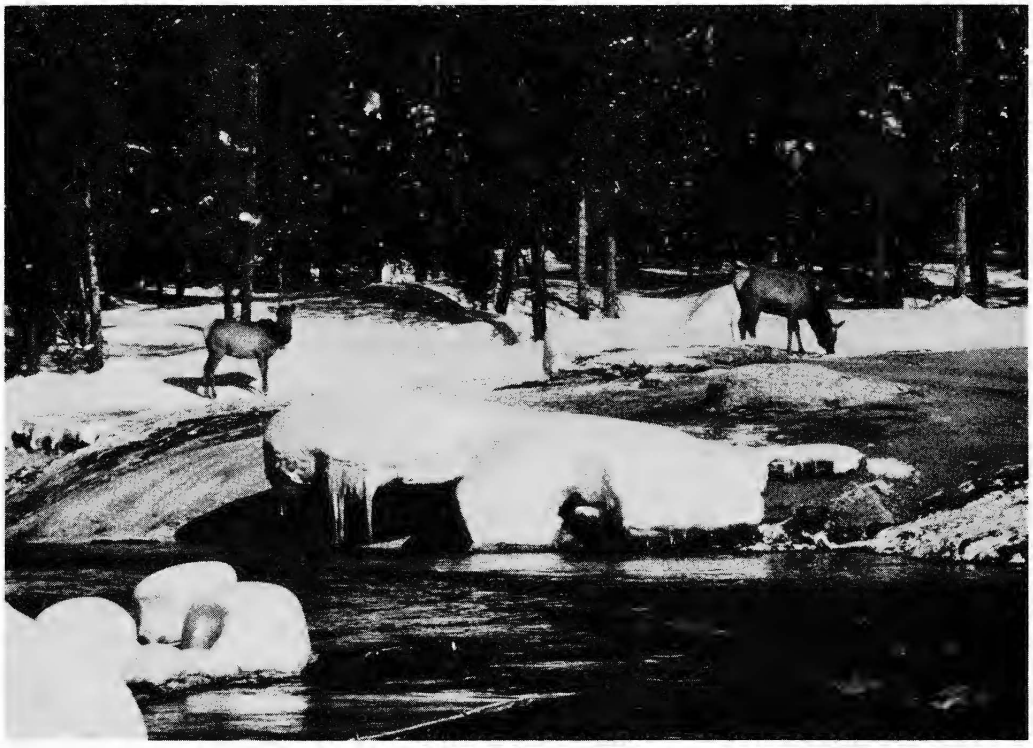

Fig. 42. Instrumented cow elk feeding at the edge of a thermal area.



Fig. 43. Elk used the warm-water streams as travel lanes.

feeding in the marshes indicate the importance of this forage (Table 7). Apparently the sedges can sustain heavy grazing during their growth period since sedge marshes do not show the range abuse which is so evident in the grassy meadows of thermal areas. It is doubtful whether an elk population could survive the severe winters of the Madison drainage without sedges as a source of food or the thermal conditions that make this forage available (Fig. 43).

SUMMARY

Cow elk of the Madison Drainage herd in Yellowstone National Park were captured, marked and instrumented with radios during 1965 and 1966. Each instrumented elk was radiotracked to determine the size of its seasonal and home reanges, and activities within specific portions of them. Six cow elk were instrumented for a combined total of 1,216 days, eight additional elk were color-marked with ear or neck markers, or ear tagged to identify individuals associated with the instrumented elk.

Winter ranges varied in size from 0.1 to 1.5 square miles and were located in relatively snow-free thermal areas. Sizes of ranges in square miles varied as follows: spring - 0.7 to 2.4; summer - 1.2 to 6.5; and fall - 2.0 to 6.4. The areas of home ranges determined for three cow elk were 6.0, 10.0, and 11.8 square miles. A composite home range for three elk belonging to the same band, calculated from 263 location points, occupied 6.5 square miles. Another composite range, plotted from 277 location points, for four elk which belonged to four different bands was 16 square miles in

extent. Centers of activity comprised about 15% of these ranges. Breeding, calving, and about 85% of the feeding occurred within centers of activity.

Movements of elk seldom exceeded a mile during a 24-hour period, except during late summer and fall. Movements increased as the seasons progressed from early spring through fall. Increased movements during late summer were correlated with vertical movements for forage and harem formation.

Seventeen 24-hour activity patterns of seven cow elk indicated that these animals spent 44, 46, 7 and 3% of their time feeding, bedding, traveling and standing, respectively. Elk spent about 2/3 of their feeding time in marshes and thermal areas during winter and spring; the other third was spent in lodgepole timber. During summer, over half of the feeding time was spent in meadows and the remainder in lodgepole timber; autumn feeding was exclusively in meadows. Elk fed more during the day than at night, and bedded more at night than during the day.

Twenty four-hour activity patterns indicate that elk are highly individualistic in feeding, bedding, and moving about but tend to conform to herd patterns. Associations between recognizable cow elk appeared to be governed by factors other than sociability.

The elk which were color-marked and instrumented for this study did not migrate; however, field observations and aerial surveys showed that some members of the Madison drainage herd did migrate,

since about half of the elk which winter on Duck and Cougar Creeks moved up and down the Madison River drainage as well as onto Madison Plateau.

The nonmigratory elk were restricted to small winter ranges by deep snow. Within these ranges they fed on aquatic and semi-aquatic plants and mistletoe. These foods were found to be high in protein. The migratory members of the herd were also restricted by deep snow and also subsisted on this atypical diet. The aquatic and semiaquatic plants grew in thermal areas and made it possible for elk to winter in what would otherwise be an uninhabitable environment.

Literature Cited

Boll, A. L. 1958. Elk nutrition - the response of elk calves to various winter diets under controlled conditions. M. S. Thesis. Univ. of Montana, Missoula. 99pp.

Brown, L. E. 1962. Home range in small mammal communities. pp. 131-179. In B. Class (Editor), Survey of biological processes 4, Academic press, N. Y. xiii + 465pp.

Burt, W. H. 1943. Territoriality and home range concepts as applied to mammals. J. Mamm. 24(3):346-352.

Calhoun, J. B. and J. V. Casby. 1958. Calculation of home range and density of small mammals. U. S. Public Health Serv. Public Health Monograph 55, iv + 24pp.

Craighead, F. C. Jr., and J. J. Craighead. 1965. Tracking grizzly bears. BioScience 15(2):88-92.

_____and_____ In press B. Grizzly Bear Prehibernation and Denning Activities as Determined by Radiotracking. Wildl. Mono.

_____, _____, and R. S. Davies. 1963. Radiotracking of grizzly bears. pp. 133-148. In L. E. Slater (Editor) Biotelemetry: the use of telemetry in animal behavior and physiology in relation to ecological problems. The Macmillan Co., N. Y. 372pp.

Craighead, J. J. and F. C. Craighead, Jr. 1956. Hawks, Owls and Wildlife. Stackpole Co., Harrisburg, Pa. and Wildl. Mgmt. Inst. Washington, D. C. 443pp.

Craighead, J. J., G. Atwell and B. W. O'Gara. In press A. Elk Migrations in and near Yellowstone National Park. Wildl. Mono.

_____, M. Hornocker, W. Woodgerd and F. C. Craighead, Jr. 1960. Trapping, immobilizing and color-marking grizzly bears. Trans. N. Am. Wildl. Conf. 25:347-363.

Dalke, P. D. 1942. The Cottontail Rabbits in Connecticut. Conn. State Geol. and Nat. Hist. Survey Bull. 65. 97pp.

Dice, L. R. and P. J. Clark. 1953. The statistical concept of home range as applied to the recapture radius of the deer mouse (Peromyscus). Univ. of Mich., Ann Arbor, Lab. Vert. Biol. Contrib. 62. 15pp.

Geis, A. F. 1954. The food consumption and relative digestibility of various winter diets fed to elk under controlled conditions. M. S. Thesis. Univ. of Mont., Missoula. 68pp.

Hayne, D. W. 1949. Calculation of size of home range. J. Mamm., 30(1):1-18.

Mohr, C. O. 1947. Table of equivalent populations of North American small mammals. Am. Midland Naturalist 37(1):223-249.

_____, and W. A. Stumpf. 1966. Comparison of methods for calculating areas of animal activity. J. Wildl. Mgmt. 30(2): 293-304.

Robinette, W. L. 1966. Mule deer home range and dispersal in Utah. J. Wildl. Mgmt. 30(2):335-349.

Sanderson, G. C. 1966. A study of mammal movements - a review. J. Wildl. Mgmt. 30(1):215-235.

Scott, T. G. 1943. Some food coactions of the northern plains red fox. Ecol. Mono. 13(4):427-429.

Stickel, L. F. 1954. A comparison of certain methods of measuring ranges of small mammals. J. Mamm. 30(1):1-15.

Varney, J. R. 1971. A Tracking and Telemetry System for Wildlife Research. IEEE National Telemetering Conference Record 71 C 10 - NTC:247-252.

Satellite Monitoring of Black Bear

Environmental data related to the winter activities of a black bear in "hibernation" were collected by satellite interrogations.

John J. Craighead, Frank C. Craighead, Jr.,
Joel R. Varney, and Charles E. Cote

The authors are, in order: Leader of the Montana Cooperative Wildlife Research Unit, Bureau of Sport Fisheries and Wildlife and Professor of Ecology, University of Montana, Missoula, Montana; Adjunct Professor of Biology, Department of Biology, State University of New York at Albany, New York and President, Environmental Research Institute, Moose, Wyoming; Research Associate, University of Montana; Space Technologist, Goddard Space Flight Center, Greenbelt, Maryland.

March 24, 1971

The application of modern electronics to wildlife research problems, using a variety of equipment and systems, has enabled researchers to obtain data on home ranges, movements, behavior, social interactions, and physiology of free-roaming animals; this information would be difficult or impossible to obtain using older methods.

Now the use of earth-orbiting satellites provides a new technique to locate and collect data from instrumented animals. It has unique advantages, including coverage of remote locations, such as the oceans and the polar regions, or surveying extremely large areas in a short period of time. An experiment, recently completed, used the Interrogation, Recording and Location System (IRLS) on the Nimbus 3 satellite to track and telemeter data from a migrating elk, Cervus canadensis (Craighead, et al. in press).

A feasibility experiment was recently performed to test the use of the Nimbus 3 IRLS System (Anonymous, 1966; Cote, 1969, 1970; Cressy and Hogan, 1965) for telemetering environmental and physiological data from the winter den of a "hibernating" black bear, Ursus americanus. The experiment was conducted with an IRLS unmanned data station (platform) originally developed for periodic global monitoring of geophysical, oceanographic, and meteorological data. The data gathering system, consisting of the platform, satellite, and a ground acquisition and command station was made available by the National Aeronautics and Space Administration.

A wild free-roaming black bear was fitted with a Craighead-Varney ground-tracking transmitter (Craighead and Craighead, 1963, 1965) and tracked to its winter den. During February and March of 1970, IRLS sensory equipment was placed in the bear's den, and data were transmitted to and stored aboard the satellite. The instrumentation procedure and our evaluations of equipment performance and of the sensory data obtained are discussed in detail.

Instrumentation Procedure

On October 16, 1969, a black bear was instrumented with a ground-tracking transmitter collar and then tracked with a portable directional receiver for 27 days while he selected and prepared a den for winter sleep.

The bear was lethargic when the den was checked on January 18, 1970. He had removed the radio collar and this was retrieved without disturbing the animal.

On February 14 the IRLS equipment was backpacked and pulled on sleds 5 km to the den. A hypodermic syringe mounted on the end of a 1.5 m jab stick was used to inject the bear with an immobilizing drug, phencyclidine hydrochloride (Sernylan). Immediately following injection, the bear came out of the den and ran about 20 m down the hill before stopping; he was then overcome by the drug. The immobilized bear was wrapped in a tarp, roped back up the hill and placed in front of the den. The sensors for IRLS satellite monitoring equipment were positioned both inside and outside of the den. At the same time, a loop antenna was placed around the bear's bed so that body temperature could be monitored by on-site temperature recording equipment. Ryan temperature recorders (a small clockwork-driven chart recorder) were placed where they would record both den and ambient air temperatures and were used to obtain a continuous temperature record to check on the temperature sensor data transmitted to the satellite.

A body temperature transmitter (Mackay, 1970) was rectally inserted in the bear and insulated with a soft paper anal plug. The bear was then moved back into the den, and the entrance was covered with snow.

The body temperature recording equipment was placed in an insulated box 15 m from the den. The IRLS equipment, connected to the sensors by a 100 m cable, was located about 90 m uphill where the antenna had a relatively unobstructed coverage of the sky.

Data were received from the den by satellite for 17 days until the IRLS equipment batteries were nearly exhausted and communication with the satellite became intermittent. Body temperature was recorded on-site for 4 days following immobilization until the transmitter either failed or was expelled.

The den was visited on March 7 to recharge the batteries. Normally this is accomplished by solar panels on IRLS platforms, but they were not used because of possible difficulties with heavy snowfalls. The equipment was placed in operation again on March 8.

Another trip to the den was made on March 12 to replace the body temperature transmitter and to modify the instrumentation set-up to allow connection of the on-site body temperature recording system to the IRLS equipment.

The bear was again injected with an immobilizing drug, and as before, he left the den and moved a short distance through deep snow before the drug took effect. He was hauled back up the hill, and a new rectal temperature transmitter was inserted. The first transmitter was not found during a quick check of the den floor and litter. New charts were placed in the Ryan temperature recorders inside and outside the den. A radio collar for tracking and location from the ground was also placed around the bear's neck to follow his movements when he left the den in the spring. After the IRLS sensors were repositioned, the bear was returned to his den, and the entrance was resealed with snow. Equipment changes and connections were made to permit monitoring of the body temperature readings by satellite as well as the temperature and light readings already being telemetered.

On March 13 satellite telemetry data indicated the bear was in his den. On March 14, however, temperatures within the den dropped to near ambient levels, and the light sensor inside the den indicated that the entrance was open. A trip to the den on the evening of March 14 showed that the bear had

left. Signals from the radio collar on the animal showed that he had moved about 2 km to the north.

Data from the sensors continued to be collected by the IRLS equipment until the batteries were exhausted on March 23. The equipment was removed from the den on April 4. Bearings taken from the radio collar on the bear at that time showed that he had remained in the new location. The bear was captured and the radio collar was removed in May of 1970.

IRLS System

A sketch of the basic components of the IRLS monitoring system is shown in figure 1. Light and temperature sensors were placed at various points of interest. The satellite communications equipment was connected to a 1.2 m diameter antenna mounted on a tripod. Power for the equipment was provided by two lead-acid automobile batteries enclosed in a styrofoam box and buried in the snow to help prevent freezing.

A simplified block diagram of the den monitoring equipment is shown in figure 2. It consists of the sensors, excitation and control circuitry for the sensors, and the IRLS equipment.

The light and temperature parameters are measured by variable resistance transducers and converted to DC voltages by the sensor excitation and control circuitry. The output of each sensor channel is a precision voltage that is proportional to the parameter being measured and of the proper magnitude and polarity for input to the IRLS system. To reduce the battery drain of the system the sensor control circuits apply excitation voltages to the sensors only during the time that satellite interrogation is in progress.

The output voltages of the sensor channels are sampled by the IRLS electronics and are converted to digital form suitable for transmission to the satellite.

The satellite interrogation sequence consists of several steps. Before the orbit on which the interrogation is to occur, a ground station (Fairbanks, Alaska) transmits a series of commands to the Nimbus 3 satellite that determine which platforms, located world-wide, are to be interrogated and the times at which the interrogations should be made. At the programmed time, the satellite comes within radio view of the IRLS platform to be interrogated and begins to transmit a coded address signal. When the IRLS equipment on the ground receives the address signal, it replies to the satellite by transmitting a response signal. The response signal prepares the satellite to store data, and the satellite then transmits an interrogation signal to the IRLS platform. The platform samples each of the sensor channels, encodes the data, and transmits it to the satellite where it is stored for later readout. The entire sequence takes only a few seconds.

During the interrogation sequence, the satellite also determines the distance to the platform by measuring the time between the sending of the interrogation signal and the response from the platform. This distance information is stored with the rest of the data and allows the location of the platform to be calculated. Since the exact location of the satellite at any time is known from its orbit parameters, each range measurement allows an imaginary circle to be drawn on the earth's surface; the platform must be located on this circle. A second interrogation sequence provides data from which another circle can be drawn which intersects the first at two points, on one of which the platform is located. The two points are sufficiently distant from one another to allow the station to be located without ambiguity by using previously known locations and deduction.

As the satellite continues on its orbit, it interrogates other IRLS stations and stores data. When it completes the orbit and passes over the

Fairbanks tracking station again, all data are transmitted from the satellite to the ground station and a new set of commands is loaded into the satellite for the coming orbit.

The Nimbus 3 satellite is in a polar sun-synchronous circular orbit, with a period of 107 minutes and an altitude of 1100 km. It passes within communications range of the same point on the earth's surface about every 7 orbits, or every 12 hours. Data can thus be obtained from an IRLS platform at a fixed location at 12 hour intervals. Interrogations for the bear den occurred near noon and midnight each day.

After the platform data has been collected from the satellite by the Fairbanks tracking station, it is sent by telephone line and microwave link to the Nimbus data processing center at NASA's Goddard Space Flight Center near Washington, D. C. After processing, the data is printed out by computer and mailed to the experimenter.

For a more detailed discussion of the IRLS system see Anonymous, 1966; Cote, 1969, 1970; Cressy and Hogan, 1965.

Sensor Placement

The light and temperature sensors were placed in the den as shown in figure 3. One temperature sensor (T2) was located directly under the bed material and the others (T1, T3, T4, T6) were arranged to measure temperatures at various spots in the rear and near the entrance to the den. A light sensor (L1) inside the den was pointed at the entrance to monitor the amount of light entering and to record if the snow seal was broken, an indication that the bear might have moved out of the den. A Ryan temperature recorder was placed near T3 to provide a continuous record of the den temperatures. A 7 cm spike attached to each sensor secured them to the den floor or wall.

Temperature sensors T5, T7, and T8 were secured to a pole outside the den entrance at different heights above the ground. Sensor T8 was buried beneath the snow, T7 was 0.6 m above the surface, and T5 1.2 m. Additional snowfall later buried T7.

Light sensors L2 and L3 were also placed on the pole outside the den. L2 was pointed at open sky and L3 at the snow surface below the den entrance.

Evidently temperature sensor T4 was dislodged from its original location during the second instrumenting on March 12. Because the identify of the sensor was uncertain at the time, it was replaced in the center of the bed with T2 (see figure 3). Later checking of field notes permitted the identification of the sensor.

Body Temperature Recording System

A block diagram of the body temperature recording system is shown in figure 4. The system consists of a temperature-sensitive transmitter implanted or inserted in the bear, a wire loop antenna located near the animal, and receiving equipment consisting of a broadcast band receiver, pulse rate converter, and chart recorder.

The body temperature of the bear is sensed by the transmitter and causes changes in the rate of a series of short pulses broadcast by the unit. These signals are picked up by a loop antenna placed under the animal as shown in figure 4 and detected by a receiver set up outside the den. The demodulated pulses from the receiver are counted and converted to a DC voltage by the pulse rate converter for input to the chart recorder. A continuous record of body temperature results.

Data were initially recorded by an on-site chart recorder. Additional equipment changes and connections were made during the March 12 visit to permit monitoring of the bear's body temperature by satellite.

Analysis of Sensory Data

Ryan Temperature Recorder Data

Continuous den and outside ambient temperature records for the period of the experiment are shown in figure 5. The recorder inside the den was placed 60 cm off the floor and approximately 80 cm from the bear's bed as shown in figure 3. The outside recorder was suspended from a tree in a shaded location near the den entrance.

Den temperature remained fairly constant, with a maximum change of 4°C and little cyclic day-night variation, during the first 4 weeks (Feb. 14 - Mar. 12) while the bear was in the den. Outside temperatures during this period ranged from a low of -18°C to a high of 3°C, a variation of 21°. The den temperature was near freezing or slightly below. The average den and outside temperatures were -1.3°C and -5.3°C, respectively, a difference of 4.0°. Cyclic day-night outside temperature variations are apparent for most days.

The small variations in den temperatures tend to follow the long-term trend of the outside air temperature. The minimum den temperature of -4°C on February 19 coincides with a low of -15°C outside, and the gradual increase in the den temperature from -4°C on February 19 to -1°C on March 2 follows a warming trend outside. A slight dip in den temperature on March 6 follows two low outside readings. However, two days of -18°C lows outside on March 10 and 11 had no effect on den temperature. The probable explanation for this is the insulating effect from a snowfall prior to March 10 which covered the den entrance more deeply than before.

The second recording period began on March 12. The den temperature remained near -1°C for the first few days. The bear probably left the den before noon on March 14. With the bear no longer present the den temperature

declined gradually, following declining outside temperatures, and reached -6°C on March 19, which coincides with an outside low of -15°C. Until the sensors were removed on April 4 the den temperature continued to follow the outside temperature to a greater extent than when the bear was present; the maximum variation of den temperature was 6°, while the outside temperature showed a maximum fluctuation of 18°. The average temperature inside the den was -3.6°C and -5.4°C outside, a difference of 1.8°. Cyclic day-night variations in den temperatures are noticeable, especially between March 28 and April 3; these variations did not appear when the bear was in the den.

IRLS Temperature Data

Temperature readings obtained from the den sensors by the IRLS system have been converted from telemetry voltages to degrees Centigrade and are shown in figures 6 through 9. Data were not received on some days because the satellite did not pass within communication range of the station, and the equipment was not operating between March 3 and March 9 because of low batteries.

Sensors T1, T3, and T6 measured air temperature in the den at different distances from the entrance, with T1 in the extreme rear, T3 midway to the entrance, and T6 near the entrance (see figure 3). T1 remained at a nearly constant temperature of -2°C as long as the bear was in the den. The low outside temperatures on February 18-21 caused only a -0.5° depression at T1. Sensors T3 and T6 were influenced more by outside temperature and showed changes of 5° during the same period (Fig. 6).

The second immobilization of the bear on March 12 is marked by a vertical dotted line on the temperature curves. All three sensors showed small temperature rises on March 13 and 14 which were probably due to the bear's movements inside the den. When the bear left the den on March 14, temperatures dropped; they then began to follow the outside temperature changes to a greater extent than before. Also the differences between the three sensors were less when the bear was no longer in the den.

Data from sensors T2 under the bed and T4 on the floor of the den near the bed are plotted in figure 7. After initial placement, the temperature of T2 climbed from 0.5°C to a high of 29°C in a 10-day period because of the warming effect of the bear's body heat. Average temperatures were near 21°C for a large portion of the time from February 20 to March 3. The readings of T4, which measured the temperature of the den floor, remained low; they were near -1°C during the same period.

When the station batteries were recharged on March 9, the data showed that the bear had changed his position in the den. T2 temperature dropped to -1°C, while T4, now influenced by the animal's body heat, rose.

After the second immobilization, T4 was moved to a location in the bed near T2. On March 13, both T2 and T4 showed temperature rises from body heat. On March 14, however, their temperatures dropped and remained low thereafter, indicating that the bear was no longer in the den. From March 14 to 23, temperatures from T2 and T4 were similar to those of the other sensors in the den.

Data from sensors outside the den are plotted in figures 8 and 9.

Sensor T7 (figure 8) was initially above the surface of the snow and followed air temperature variations closely. From about March 2 on, however,

it shows less change with air temperature and was probably covered by new snowfall at this time. Examination during the visit to the den on March 12 confirmed that the sensor was covered.

Sensor T8 (figure 8) was buried in the snow and remained at a relatively constant temperature, which only varied about 5° around an average temperature of -5°C.

Sensor T5 (figure 9) recorded air temperature for the entire time since it was initially placed 1.2 m above the snow surface and remained uncovered. Readings from this sensor correspond closely with the air temperatures measured by the Ryan recorder (figure 5).

Sensor T9 measured air temperature at the location of the sensor excitation and IRLS platform electronics, which were located on the hillside about 30 vertical m above the den entrance. The readings correspond with those of T5 and the Ryan recorder.

Data from sensors T1, T2, T3, T4, and T5 are plotted simultaneously in figure 10 for comparison. The temperature points for each sensor are connected by lines for easier visibility and do not represent temperatures between data points. The influence of outside temperature on T3 and its lack of effect on T1 are apparent. The moderating effect of body heat from the bear on den temperatures is also evident in the way that temperatures from all inside sensors followed outside temperatures after the bear left the den.

Average temperatures inside the den with the bear present ranged from 18.1°C in the bed to -3.0°C near the entrance, while outside air temperature was -6.7°C. After the bear left the den, inside temperature at the rear of the den dropped to about 2° above the average outside temperature (Table 1).

Light Sensor Data

Telemetry data from the three light sensors are tabulated in figure 11.

Table 1

Average Temperatures in Den

Sensor location	Average Temperature	
	Bear in den (2-15 to 3-13)	Bear absent (3-14 to 3-23)
Rear of den (T1)	-1.7°C	-3.0°C
Bed (T2, T4)	18.1	-2.9
Top front of den (T3)	-3.0	-4.3
Outside ambient (T5)	-6.7	-5.0

L2 was located outside the den and pointed at open sky at an angle of 45° from horizontal. The voltage readings from the sensor showed day-night variations very well; it showed zero readings at night and readings in the 5 volt region during the day. The variation between day readings, however, is not enough to determine details of weather conditions such as the amount of cloud cover. Further experimentation with sensor scale factors may provide better resolution for future experiments.

Light sensor L3 was also located outside and was pointed down at the snow. An unexplained 2.35 volt offset is evident in the readings between February 15 and March 12. After the equipment modifications for body temperature monitoring were made on March 12, however, the problem disappeared and normal readings were obtained.

Sensor L1 was inside the den pointing at the entrance. Zero readings between February 15 and March 13 show that the entrance was covered with snow and that the bear did not venture out. The day reading on March 14 showed that the den entrance was open for the first time. This together with low bed temperature readings led to the suspicion (later verified) that the bear had left the den. Readings on subsequent days showed that the entrance remained open.

Body Temperature Data

On February 14, temperature data from the rectal transmitter was not received for the first 6 hours after the bear was placed in the den to recover from the effects of the immobilizing drug. This was probably because the bear did not immediately move all the way back into the den and lie over the loop antenna encircling his bed.

The system began to record data around midnight and continued for the next 4-1/2 days until 1800 on February 19. Data taken from the recording at 1 hour intervals is plotted in Figure 12.

The body temperature of the bear reached an equilibrium value of approximately 35.3°C by the morning of February 15 and remained there for the next two days. This corresponds closely to a temperature of 35.6°C taken previously with a rectal thermometer from another black bear immediately following immobilization; it also corresponds closely to telemetered temperature readings obtained from a thermistor probe inserted 4 cm into the neck muscle of a black bear in his winter den (Craighead and Craighead, 1965). Figure 12 shows that the nighttime body temperature was slightly lower than the daytime temperature (about 0.5° variation); however, the amount of data is not sufficient to allow any conclusions to be drawn about nychthemeral body temperature fluctuations.

The telemetered temperature dropped to 33.8°C at 1500 on February 17, and remained in that vicinity through February 18. On February 19, it made several large excursions before data stopped at 1600 hours. The reason for the large apparent changes is not clear, and two causes are possible. The transmitter could have been expelled by the bear with consequent temperature changes during the process. The transmitter was not tested below 20°C, but it is probable that it would stop operating at freezing temperatures after being expelled. The other possibility is that the waterproofing of the transmitter was not adequate and fluids in the colon caused it to fail; the apparent temperature changes could have been caused by erratic operation.

After a new transmitter was inserted in the bear on March 12, data were received for two short periods. The data are shown in figure 12. The indicated temperature during the first of these periods varied between 35.6 and 36.7°C. Temperature during the second period increased from 34.8 to 35.5°C. The gaps in the data are due to the bear moving around in the den and out of range of the loop antenna. Disturbing the bear a second time probably reduced

his lethargy, which might account for the higher body temperature readings. He left the den on the morning of March 14, and no further data were obtained.

Neither of the body temperature transmitters were recovered for recalibration after the experiment, so the data should be accepted with reservations.

Satellite interrogations did not occur during the periods when body temperature data were being recorded (see figure 12), so no body temperature data were telemetered by the IRLS system. This can be accomplished in future experiments. It may also be possible in future experiments to implant the transmitter in the bear's abdominal cavity; this will result in greater accuracy if the problems attendent with surgery under rigorous field conditions and the additional stress on the bear can be overcome.

Location Data

The den locations computed from satellite data are shown in figure 13. A location was obtained on each orbit in which two or more frames of data were received by the satellite. A total of 29 locations, approximately one per day during the time that the equipment was operating, were computed during the experiment.

Three location points were obviously erroneous (more than 15 km from the known location), and are not shown in the figure. For the remaining 26 points, the average location error was 3.77 km and the root-mean-square error was 4.31 km. All location points lie within a circle of 7.25 km radius.

Since the den location was known in this experiment, the location capability of the IRLS system was not required. The data are of interest, however, since they give an indication of the accuracy that could be obtained with the equipment under different circumstances where location is desired but is unknown.

Discussion and Summary

Physiological data from free-living animals and environmental data related to their activities and behavior can be collected by satellite interrogations. The IRLS system provides 28 channels of information at 12 hour intervals and has the capability for rapidly collecting and processing a wide range of ecological data from remote unattended locations.

Sensory data collected in this feasibility experiment with a hibernating black bear showed that the temperature in most locations in the den remained near freezing. Average temperature recorded in the bear's bed was 24.8°C above outside ambient. Other points in the den were 3° to 5°C above outside temperatures. After the bear left, average den temperature was 2°C above the average outside ambient temperature. The body temperature of the bear reached an equilibrium value of approximately 35.3°C with about a 0.6° day-night variation.

Bears lose relatively little body weight during the period when they are in the winter dens; the majority of weight loss occurs between the time they emerge from the den in the spring and the time when natural food becomes plentiful in late June. This fact, together with the relatively high body temperature of the bear during the winter, indicates that the amount of body heat lost within the den is very low.

The den air temperatures measured during this experiment are lower than might be expected and show that little heat is radiated from the bear's body. Loss of body heat by air circulation is low in the still air of a den sealed by snow, and heat loss by conduction is reduced by the insulating bed material which envelops most of the bear as it is curled in sleep. Thus the bear is surrounded by a microclimate. This microclimate is relatively

confined, as indicated by high temperature readings in the bed and much lower readings from sensors located only a short distance away.

Further experiments with more temperature sensors would allow better definition of the extent of this microclimate and of temperature gradients near the animal. Thermal flux and radiation sensors could be placed in the bed and in the air strata above the animal to measure net heat loss. These measurements would lead to a better understanding of the energy balance and heat conservation mechanisms of hibernating bears.

The results also demonstrate the way in which temperature and light sensors could be used in future experiments to gather additional information on whether and how often a bear leaves the den in the winter and early springs, movements within the den, and other behavioral data. With transmitter implants, information on body temperature and heart rate can also be obtained by satellite utilizing IRLS equipment. With appropriate sensors, other physiological parameters can be measured and studied.

These techniques would be of special value in studies of polar bear. For example, environmental parameters from a number of polar bear dens scattered throughout the Arctic could be simultaneously monitored. Information about the location, heart rate, and body temperature of instrumented polar bears obtained with improved equipment and techniques would aid in

understanding the thermoregulatory processes (Øritsland, 1970) and biological rhythms in these large carnivores, as well as their patterns of movement (Flyger and Townsend, 1968).

The IRLS system's flexibility and usefulness could be increased by data sampling at closer than 12 hour intervals. This could be accomplished by auxiliary equipment which stores data for later readout. Use of a timer is desirable to turn the system off between interrogations to extend battery life.

On-site electronic systems, such as the body temperature system used in this experiment, can be connected to the IRLS system for interrogation by satellite. However, where on-site recording systems can be tended without great logistic problems, they are less expensive than the satellite system and can provide equally accurate data from a wide range of sensors. The value of satellite monitoring increases directly with the remoteness of the area where data is to be collected and with the need for near simultaneous recording from a large number of stations.

A detailed cost comparison of satellite monitoring versus on-site recording is difficult to make for the den monitoring experiment described, since the satellite system was designed and funded for meteorological purposes and we merely tapped some of its unused potential. Both current and planned satellites (Nimbus, ERTS, and others) have data collection systems with a capability which greatly exceeds the use that has or will be made of them.. They could easily accommodate many feasibility experiments like this one with little additional cost. In the future, as greater use is made of satellite data collection systems, the ability of a single satellite to service many hundreds or thousands of ground stations will make it the most cost-efficient method of gathering data in many situations.

Acknowledgements

This project was a joint endeavor between the National Aeronautics and Space Administration, the Montana Cooperative Wildlife Research Unit, the Environmental Research Institute and the National Geographic Society. The experiment was conducted in Yellowstone National Park in cooperation with the National Park Service and the Bureau of Sport Fisheries and Wildlife,

We thank Jay Sumner, Harry Reynolds III, Vincent Yanonne, and James Claar for assistance in the field, and Helmut K. Buechner and George J. Jacobs for helping to coordinate the project.

References

Anonymous, 1966. IRLS platform electronics and telemetry equipment instruction manual, Radiation, Inc. (NASA-GSFC Contract NAS 5-9559, June 1966).

Cote, C. E. 1969. The interrogation, recording and location system experiment. Goddard Space Flight Center Publication No. X-733-69-336. 22 P.

_____. 1970. The interrogation, recording and location system experiment. Geoscience Electronics Symposium, Trans. IEEE, Special Issue. 5 P.

Craighead, F. C., Jr., and J. J. Craighead. 1963. Proceedings 18th Annual Instr. Soc. Amer. Conf. Biotelemetry Session.

_____ and _____. 1965. BioScience 15. (2):88-92.

_____ and _____, C. E. Cote, and H. K. Buechner. 1971. Satellite Tracking of Elk. In press.

Craighead, J.J. and F.C. Craighead. 1965. Report on Radiotracking and Telemetering Systems for Large Western Mammals. 68 pp. Unpublished.

Cressey, J. R. and G. D. Hogan. 1965. The Interrogation, Recording and Location System Experiment. Proceedings of the 1965 National Telemetering Conference. Pp. 96-101.

Flyger, V. and M. R. Townsend. 1968. The Migration of Polar Bears. Scientific American, 218 (2):108-116

MacKay, R. S. 1970. Biomedical Telemetry. John Wiley & Sons, Inc., New York.

Øritsland, N. A. 1970. Temperature Regulation of the Polar Bear (Thalarctos maritimus). Comp. Biochem. Physiol. 37:225-233.

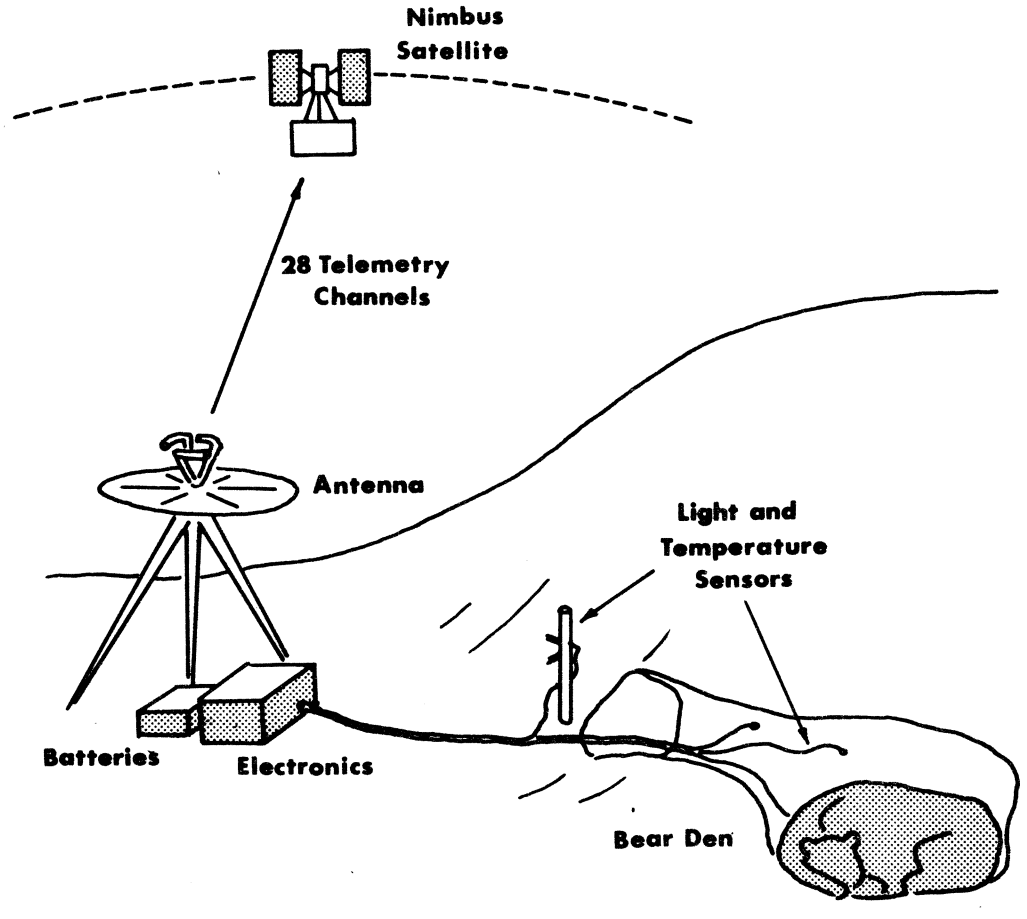

Figure 1: Bear den instrumentation with IRLS equipment. Temperature and light data from sensors placed in the den are encoded and relayed to the Nimbus 3 satellite.

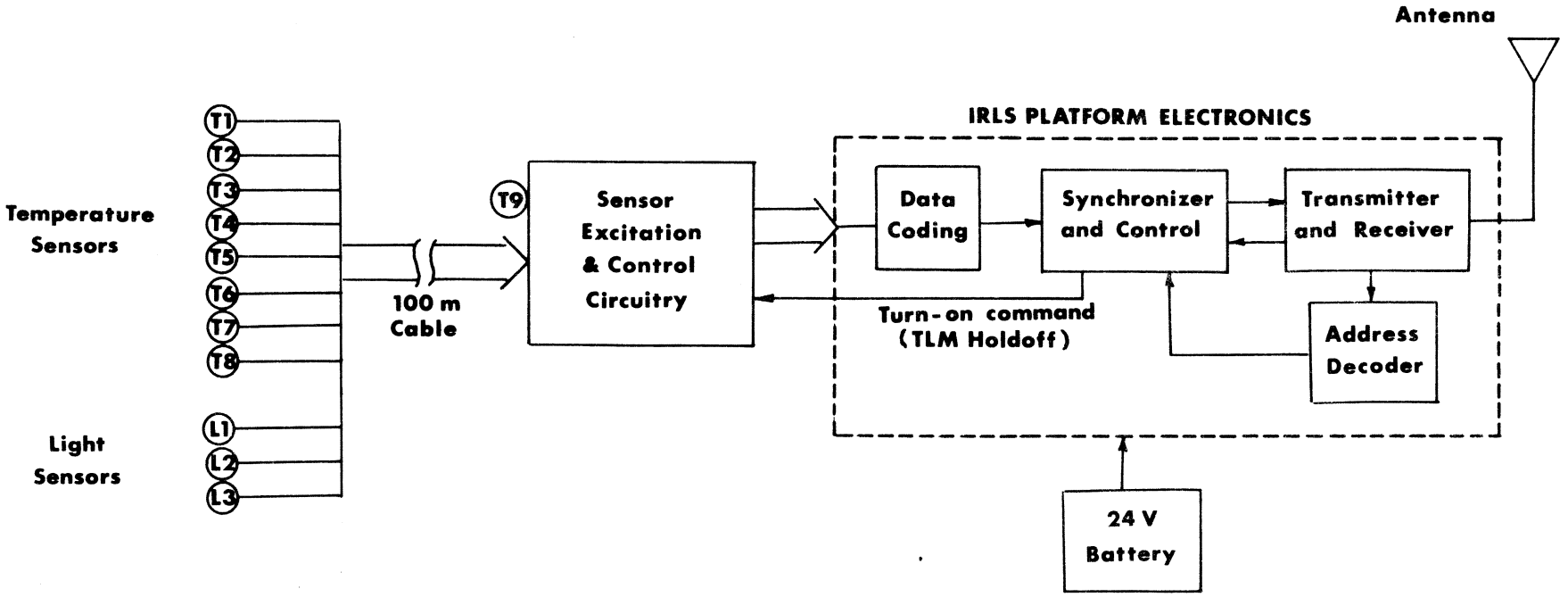

Figure 2: Block diagram of the IRLS portion of the den instrumentation equipment. The sensors are activated upon command by the satellite and the resulting output voltages are sampled and encoded for transmission to the satellite.

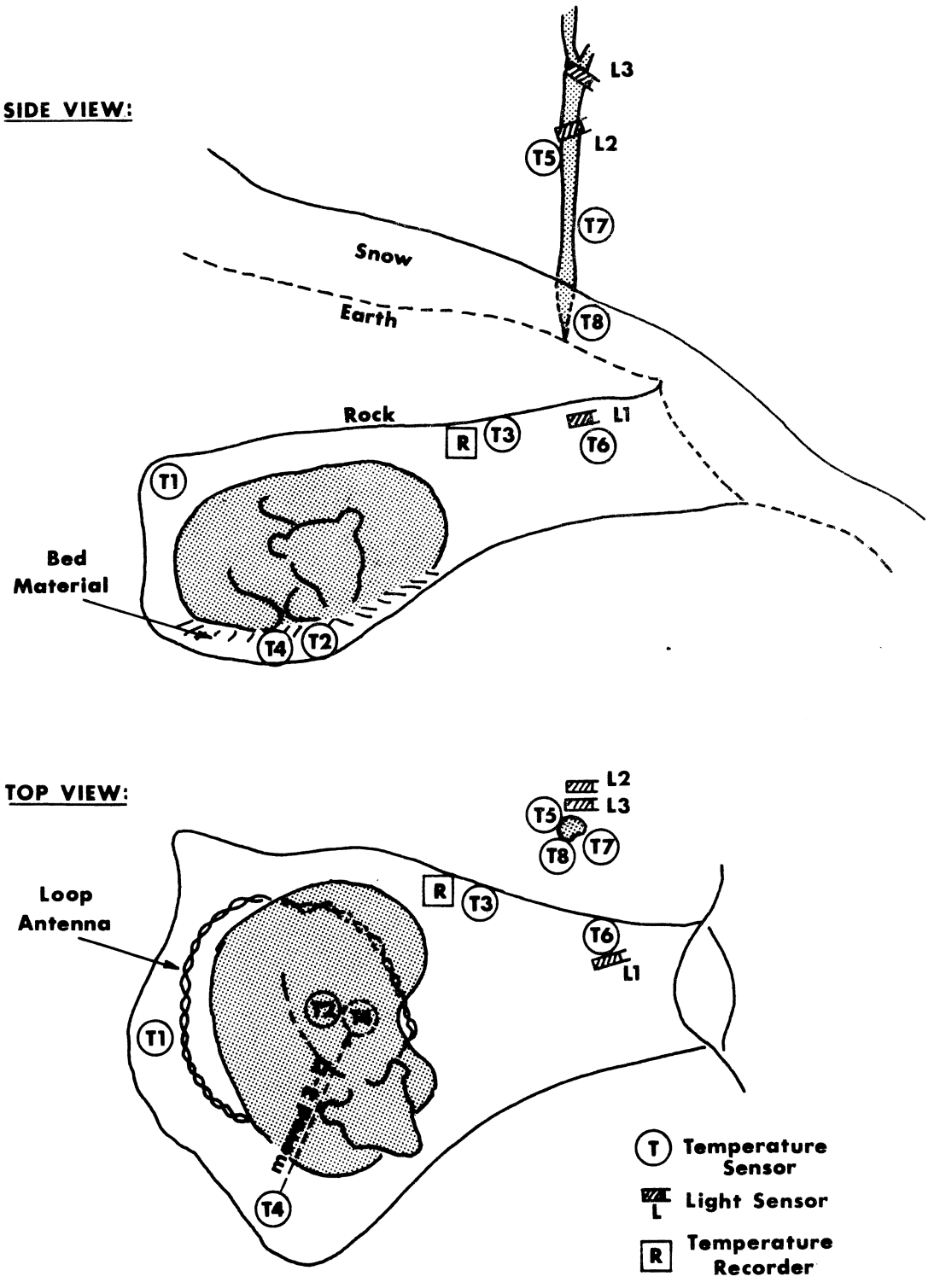

Figure 3: Placement of light and temperature sensors and recorders inside and outside the den. An additional temperature sensor and a temperature recorder were located further uphill from the the den and are not shown.

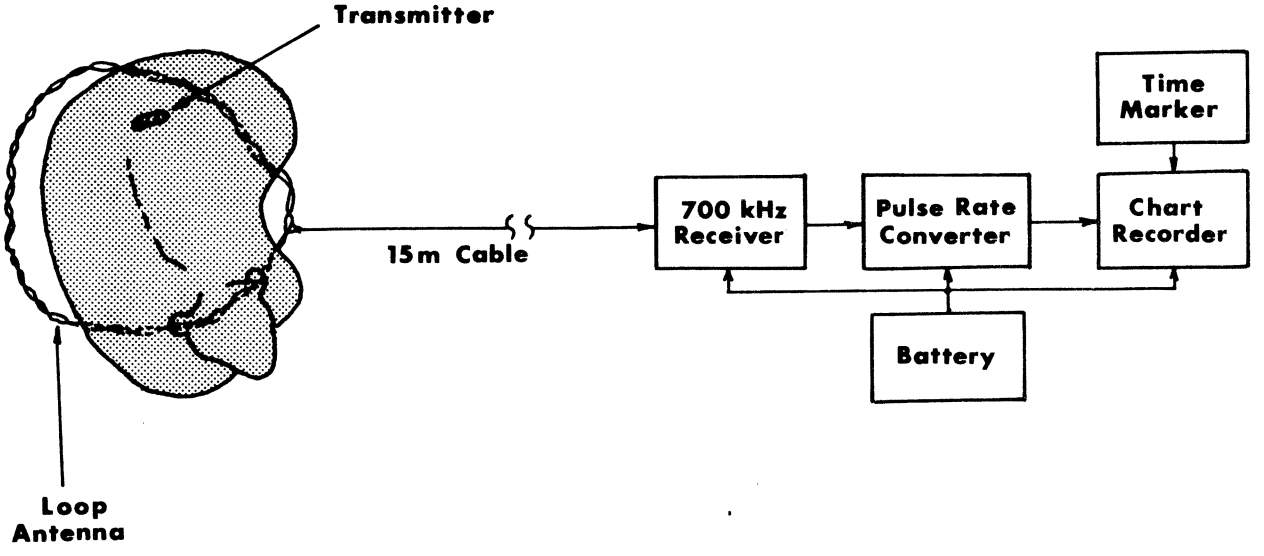

Figure 4: Block diagram of the body temperature recording system. Pulses from the temperature-sensitive transmitter in the bear were picked up by the loop antenna and recorded by equipment placed outside the den.

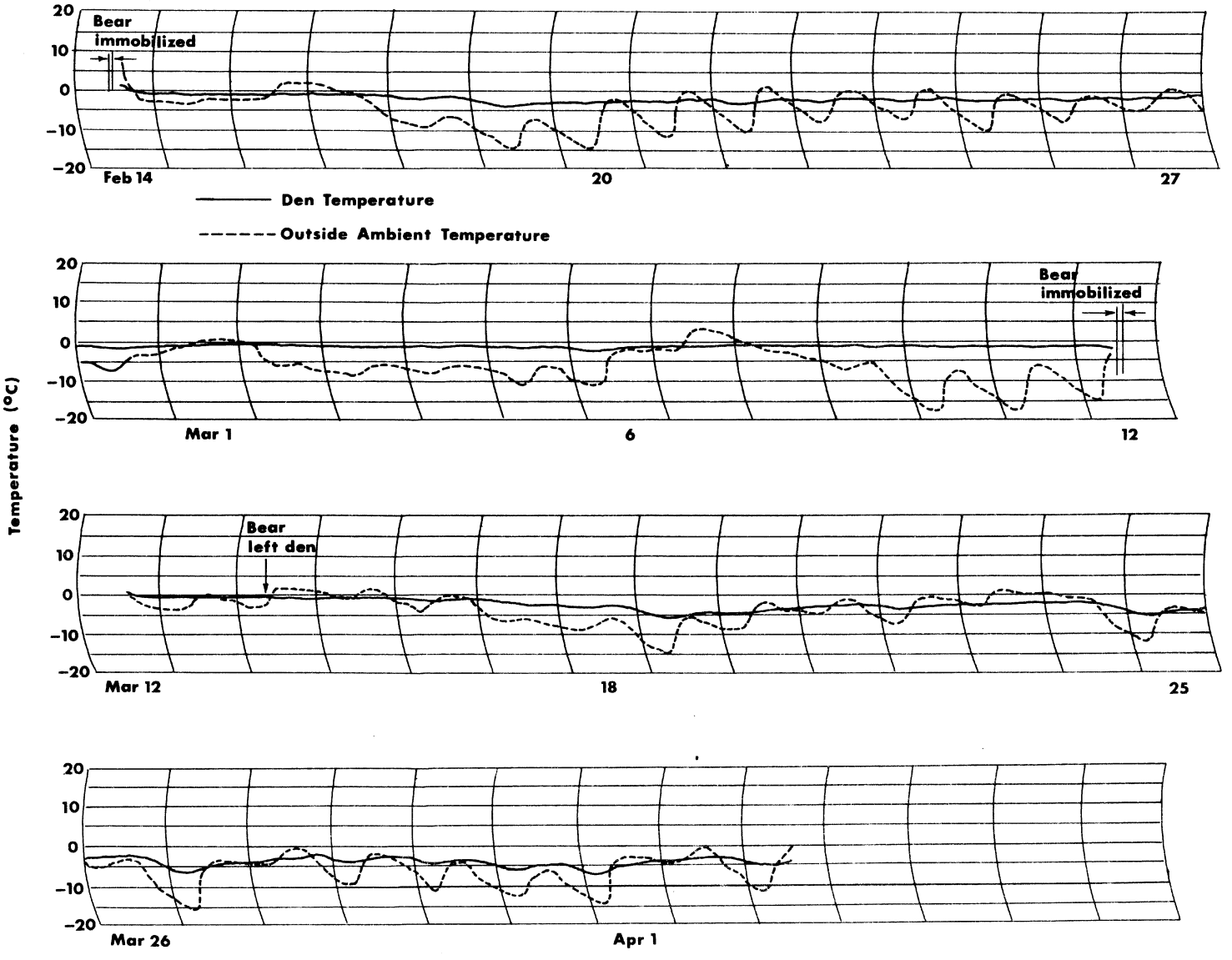

Figure 5: Continuous air temperature recordings inside and outside the den. The inside temperature remained nearly constant near freezing while the bear was in the den. After he left, den temperature decreased and was influenced more by outside temperatures.

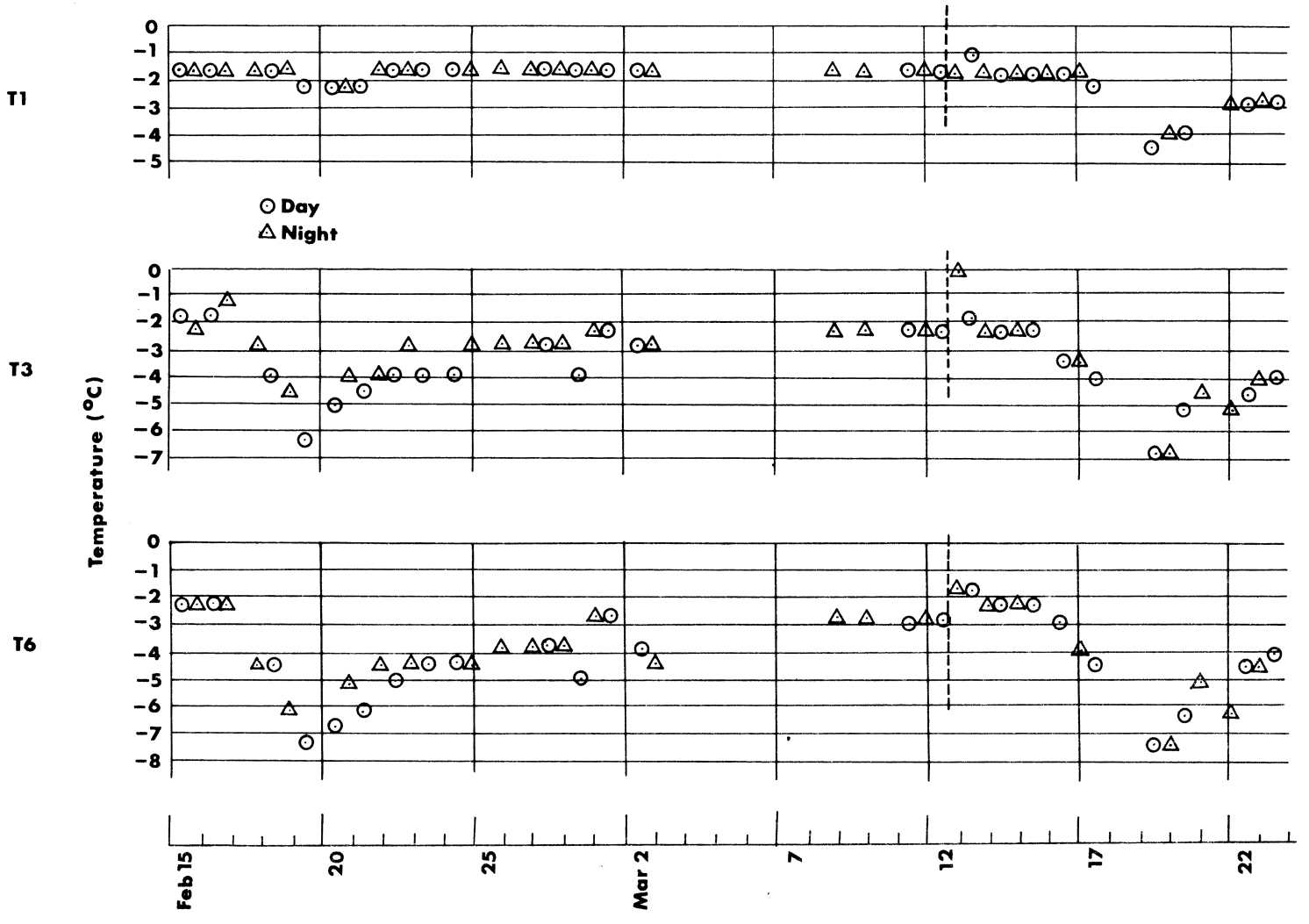

Figure 6: Satellite telemetry data for temperatures inside the den. T1 was placed in the upper rear of the den, T3 halfway between the rear and the entrance, and T6 near the entrance. The second immobilization of the bear is shown by the vertical dotted line.

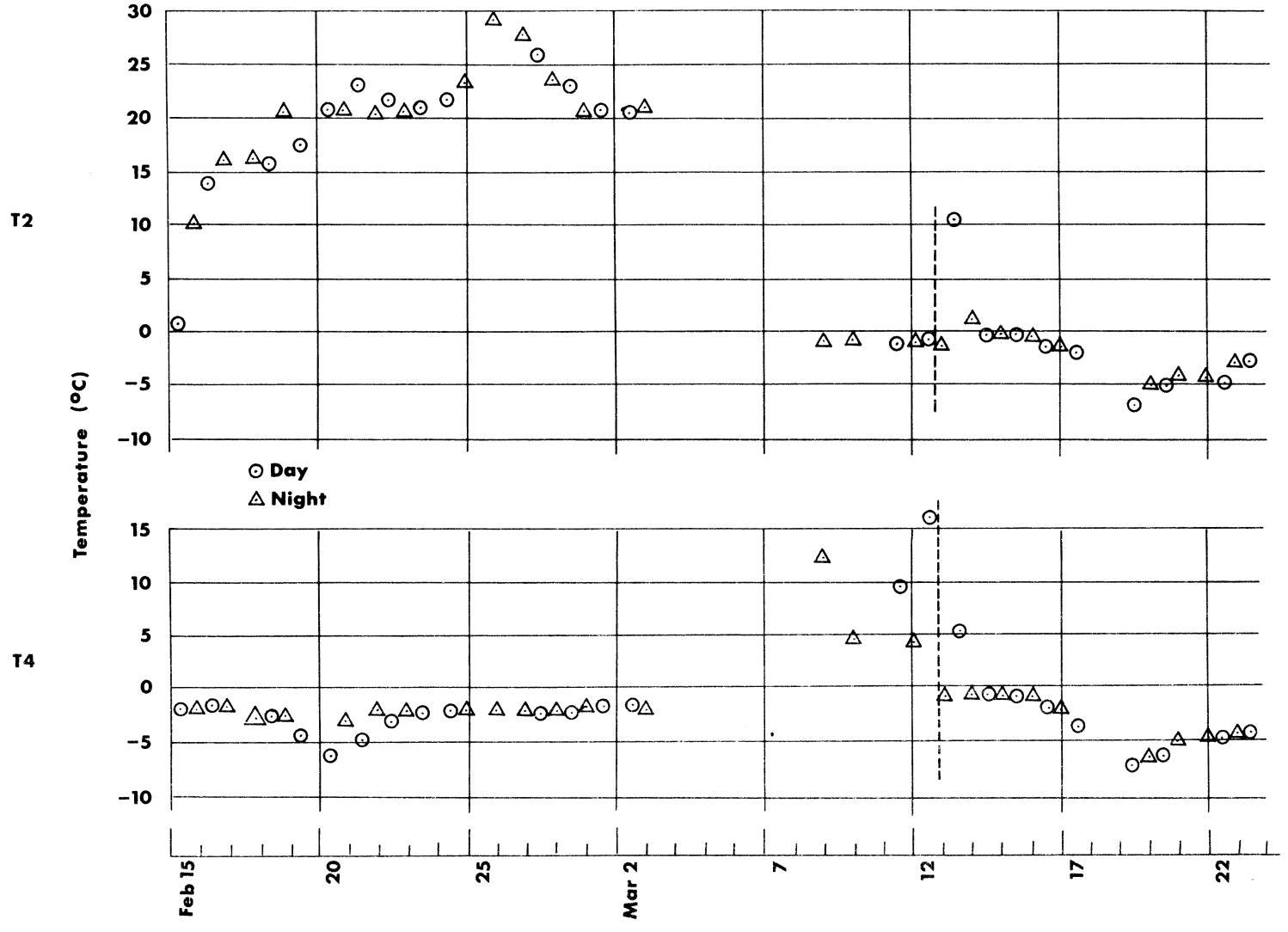

Figure 7: Satellite telemetry data for temperatures inside the den. T2 was placed under the bed material on the den floor. T4 was initially located near the floor on the left side of the den and was moved under the bed during the second visit to the den. Considerable warming was caused by the bear's body heat.

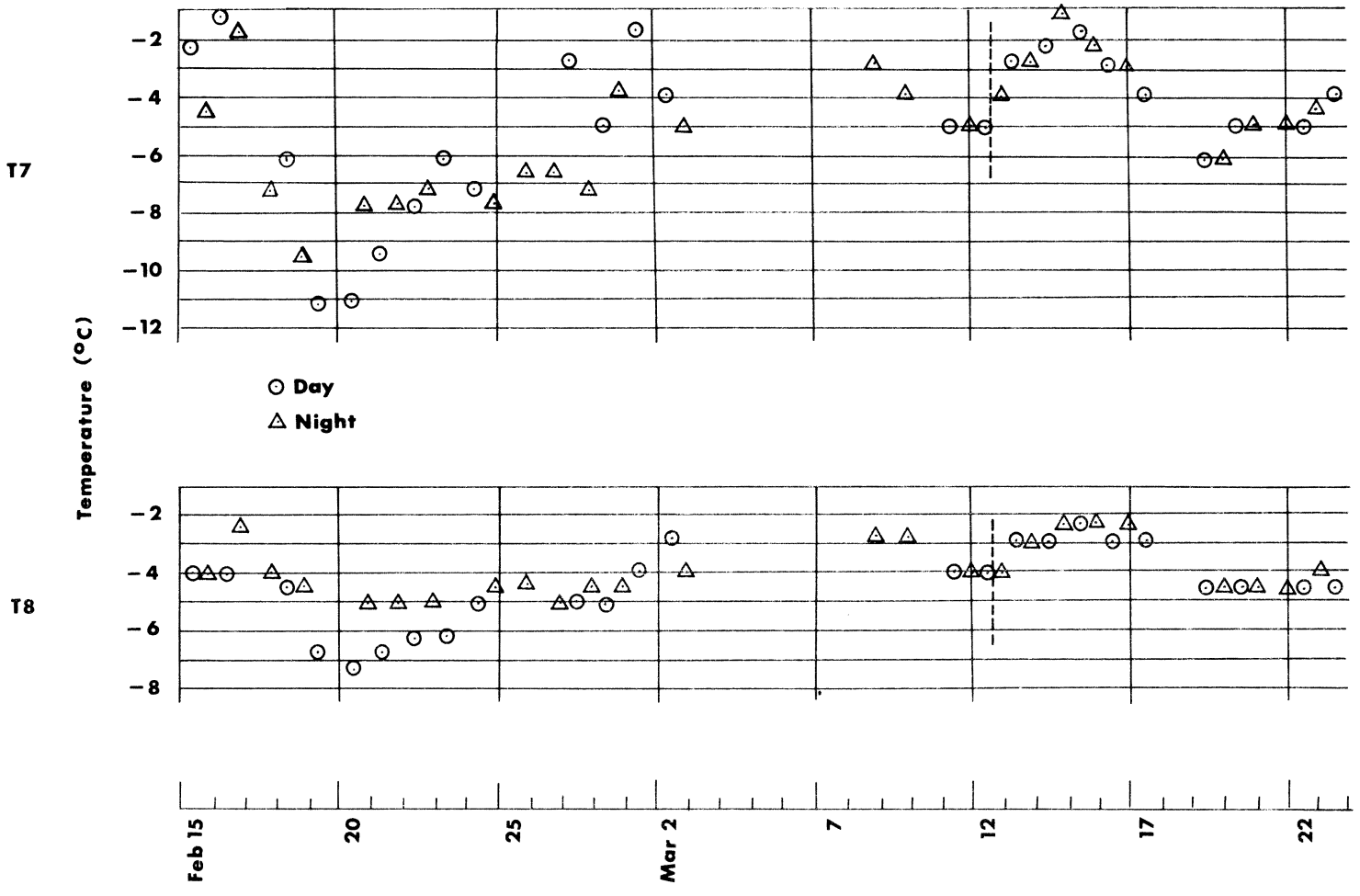

Figure 8: Satellite telemetry data for outside ambient temperatures near the entrance of the den. T8 was placed beneath the snow. T7 was initially 0.6 m above the surface but was later buried by additional snowfall.

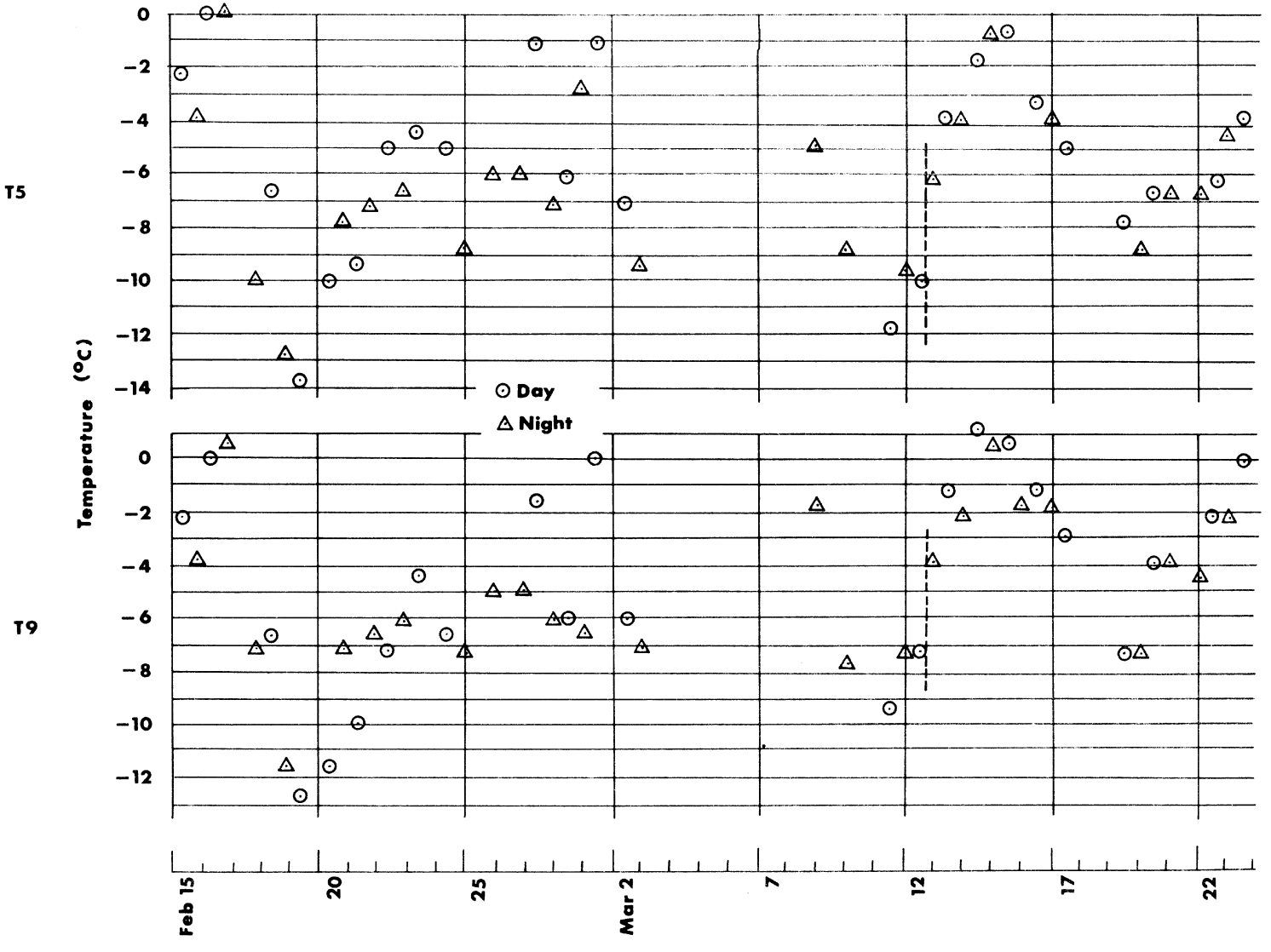

Figure 9: Satellite telemetry data for outside ambient temperature. T5 was located 1.2 m above the snow near the den entrance. T9 measured air temperature at the platform location 100 m uphill from the den.

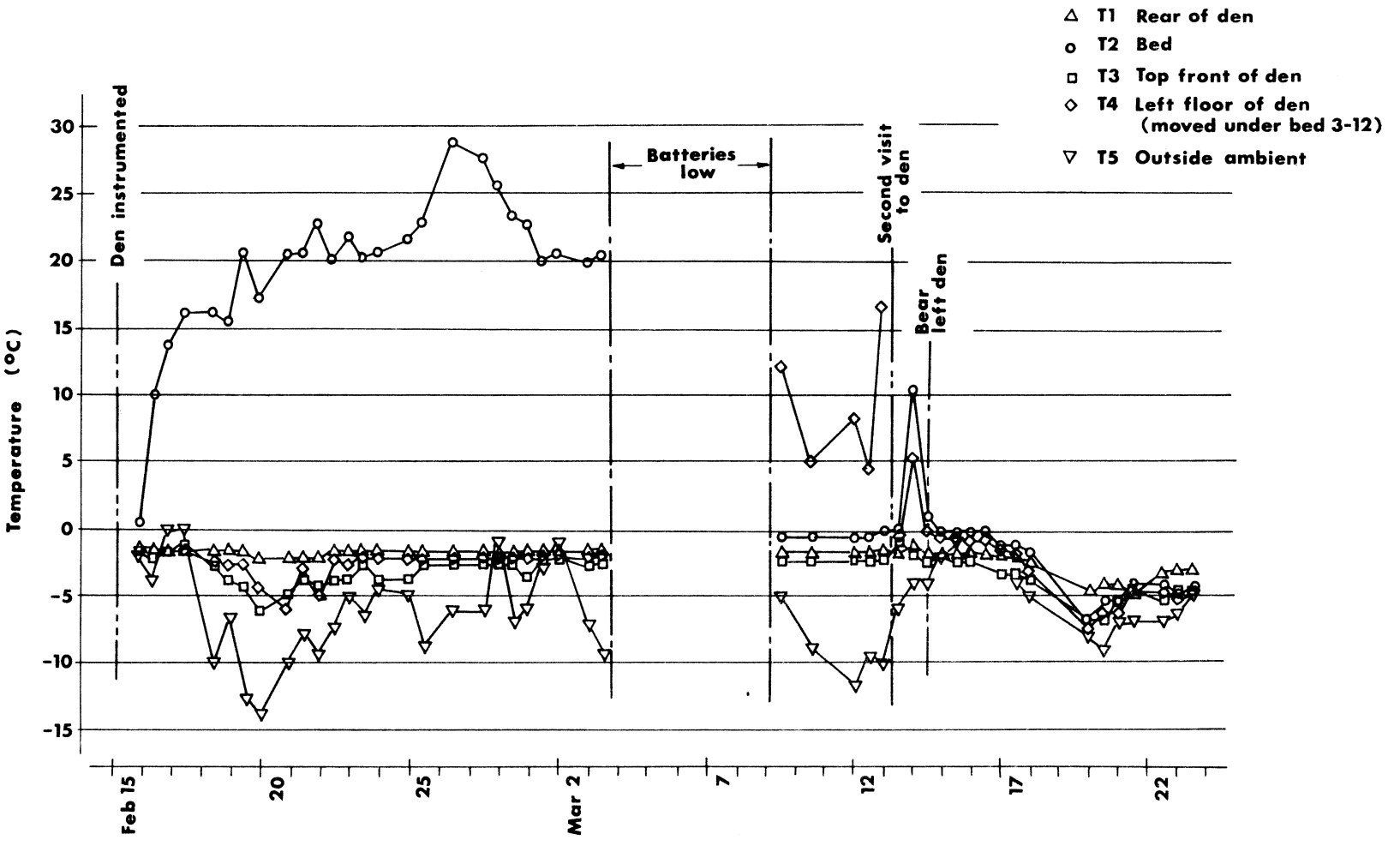

Figure 10: Comparison of temperature data from several sensors. The decreasing effect of outside temperature on sensors located further from the den entrance is apparent, along with the influence of the bear's body heat on den bed and air temperature.

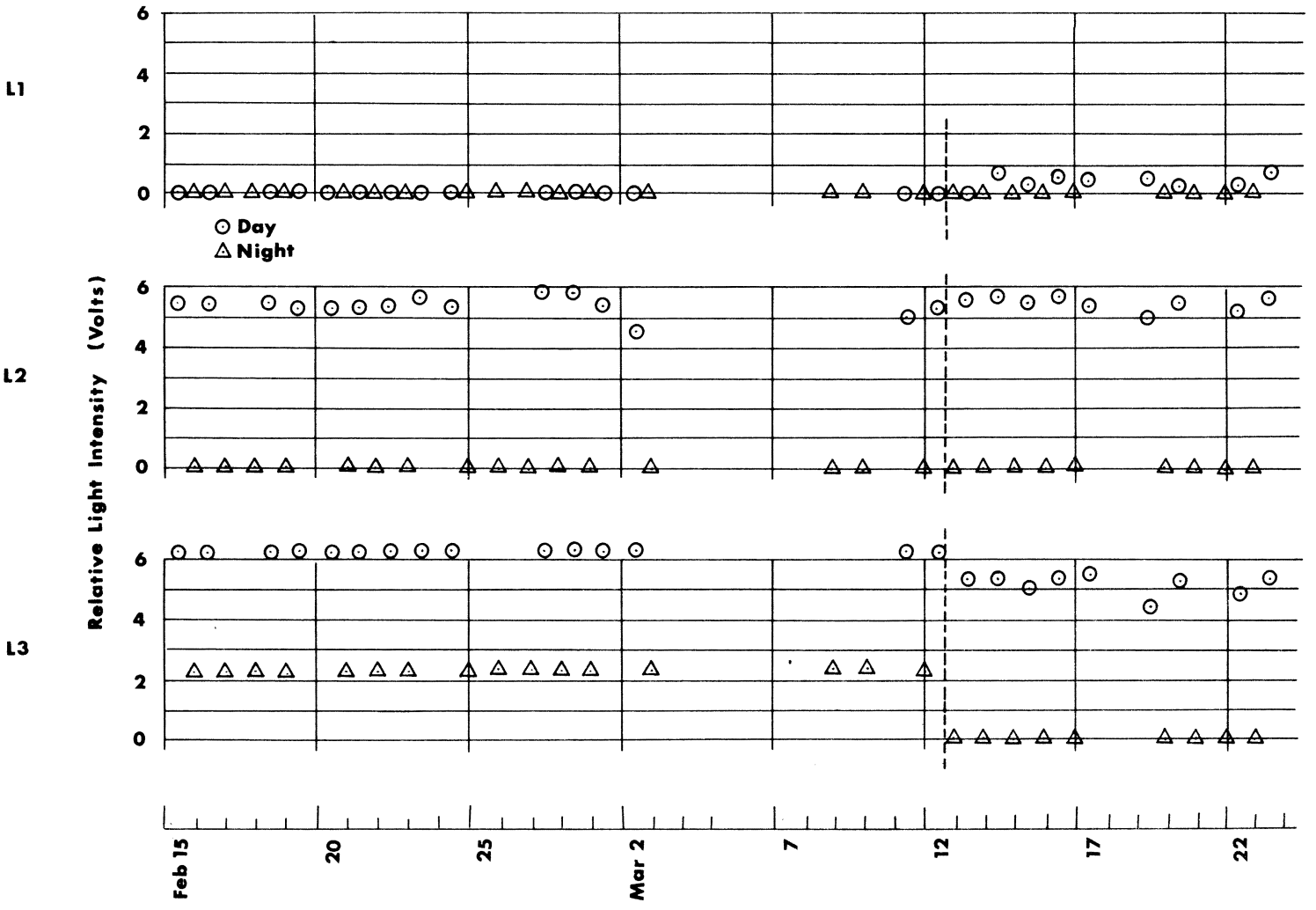

Figure 11: Satellite telemetry data for the light sensors. L1 was located inside the den pointing towards the entrance, while L2 and L3 were outside.

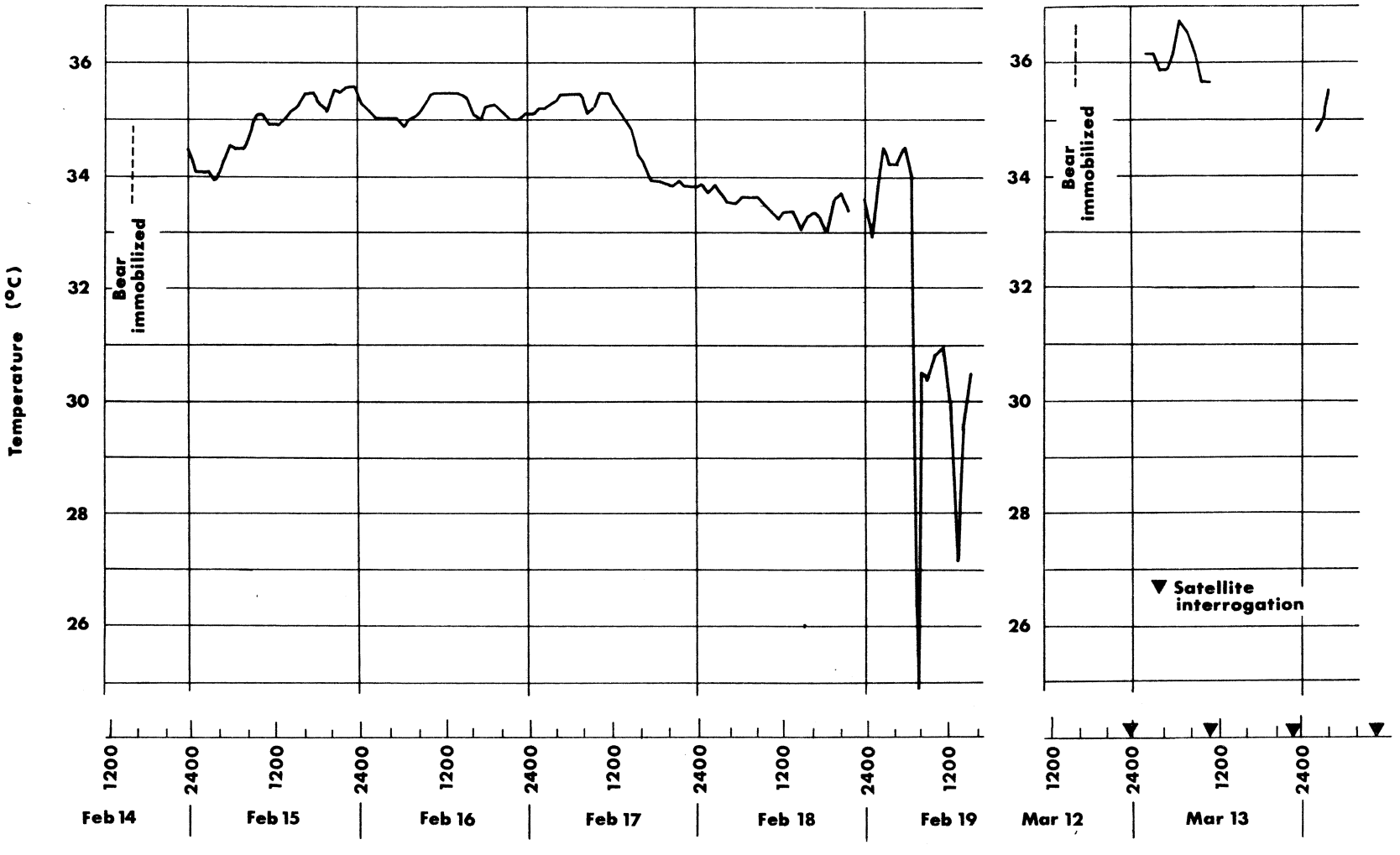

Figure 12: Temperature data telemetered from the rectally-placed transmitters. Recordings were obtained for 4 days following the first immobilization and for portions of 2 days after the second.

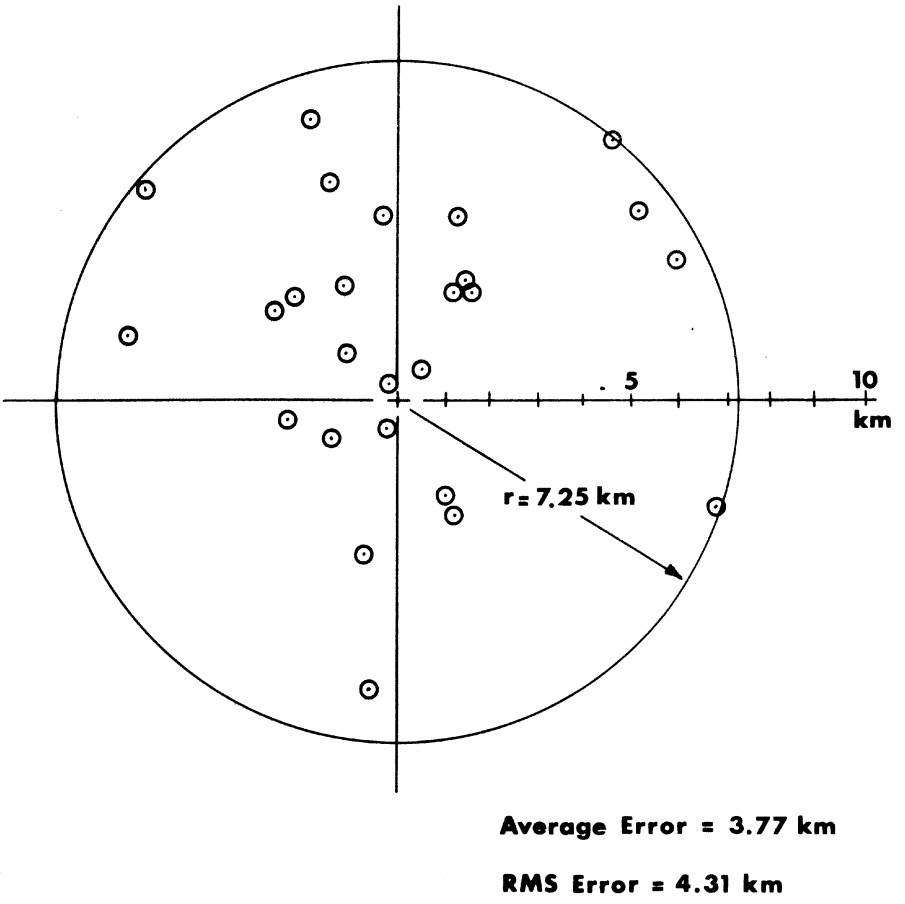

Figure 13: Den locations computed from satellite data. The known den location is the center of the circle.



Plate 1: Black Bear (Ursus Americanus)



Plate 2: Fitting immobilized bear with a radio collar so that he may be tracked to his hibernation den



Plate 3: Moving equipment to the den area by oversnow vehicle

Plate 4:

Base camp near den

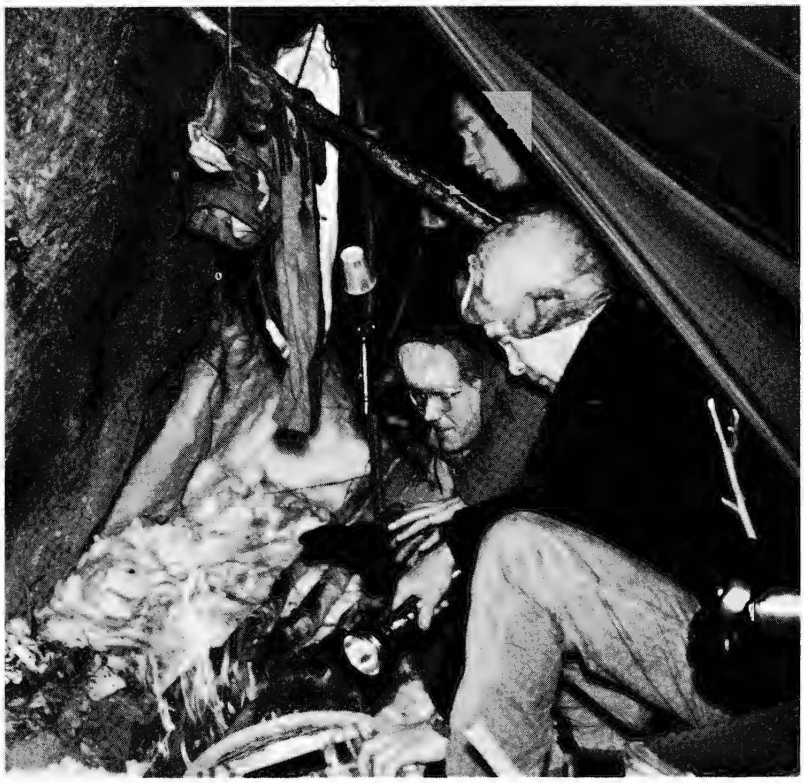



Plate 5: Black bear in hibernation den. The animal is in a state of hypothermia with a body temperature of 35.6° C (96° F).



Plate 6: Setting up the antenna for the satellite data collection equipment



Plate 7: Preparing to carry bear back to den after the immobilizing drug had taken effect

Plate 8:

Immobilized bear in front of den entrance





Plate 9:

Replacing immobilized bear in den after installation of sensors

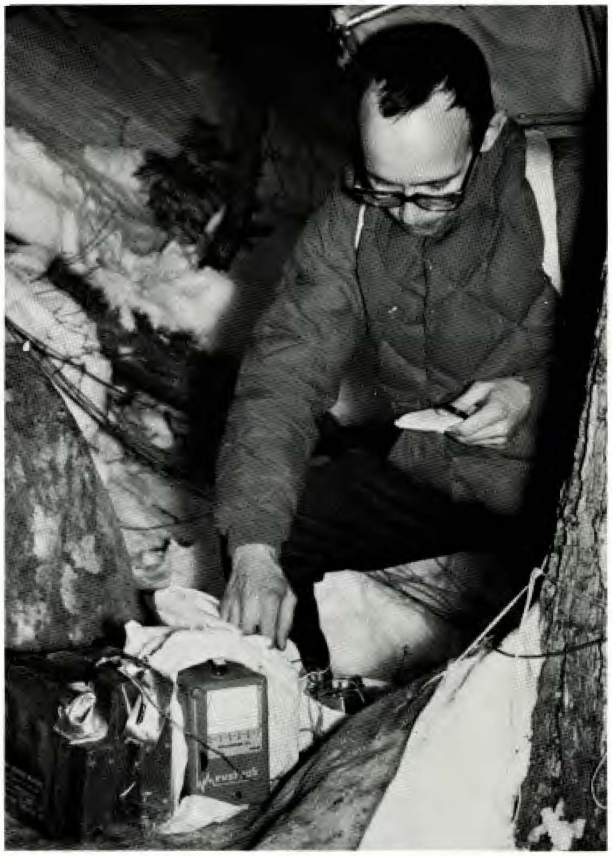

Plate 10:

On-site body temperature recording equipment outside den entrance. Data obtained from this equipment could be transmitted to the satellite.